Rev.	Description	By	Date
A	For review	SHO	21-09-2026
10	Initial release	JVE	21-09-2026

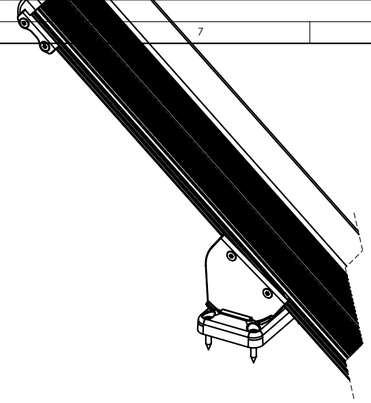

SPECIFICATION:

MAXIMUM USER LOAD: 140 kg (308 lbs) (inclination 25°-40°)
130 kg (286 lbs) (inclination 40°-50°)
120 kg (264 lbs) (SlideTrack)

NUMBER OF PERSONS: 1 PERSON

RATED SPEED: 0.11m/s (21.7 ft/min)

MAXIMUM INCLINATION: 50° (LOCAL LEGISLATION TO BE TAKEN INTO ACCOUNT)

MINIMUM INCLINATION: 25°

RAIL LENGTH: MAXIMUM LENGTH FOR 10 SINGLE JOURNEYS IN ONE HOUR: 7m

POSITION ON STAIRS: LEFT OR RIGHT HAND (APPLICATION DEPENDANT)

SEAT TYPES: STYLE SEAT

SEAT COLOURS: VANILLA BEIGE LEATHER

CONTROL POSITIONS: LEFT OR RIGHT HAND.

FOOTPLATE OPTIONS: MANUAL OR POWERED FROM ARM

FOOTPLATE TYPES: STANDARD, EXTENDED LEFT OR RIGHT, LARGE

FOOTPLATE COLOURS: GREY WHITE

SWIVEL OPTIONS: MANUAL OR POWERED

SEAT BELT TYPES: RETRACTABLE RIGHT OR LEFT HANDED (EXTENSION OPTIONAL)

POWER SUPPLY: SINGLE PHASE SUPPLY: MOSO 33V 1.0A XKD-1000NHS

OPTIONS: EASY HINGE
ZERO INTRUSION
SLIDE TRACK
HOLIDAY SWITCH
ONE TOUCH ALERT

SAFETY DEVICES: REDUNDANT DRIVE SYSTEM

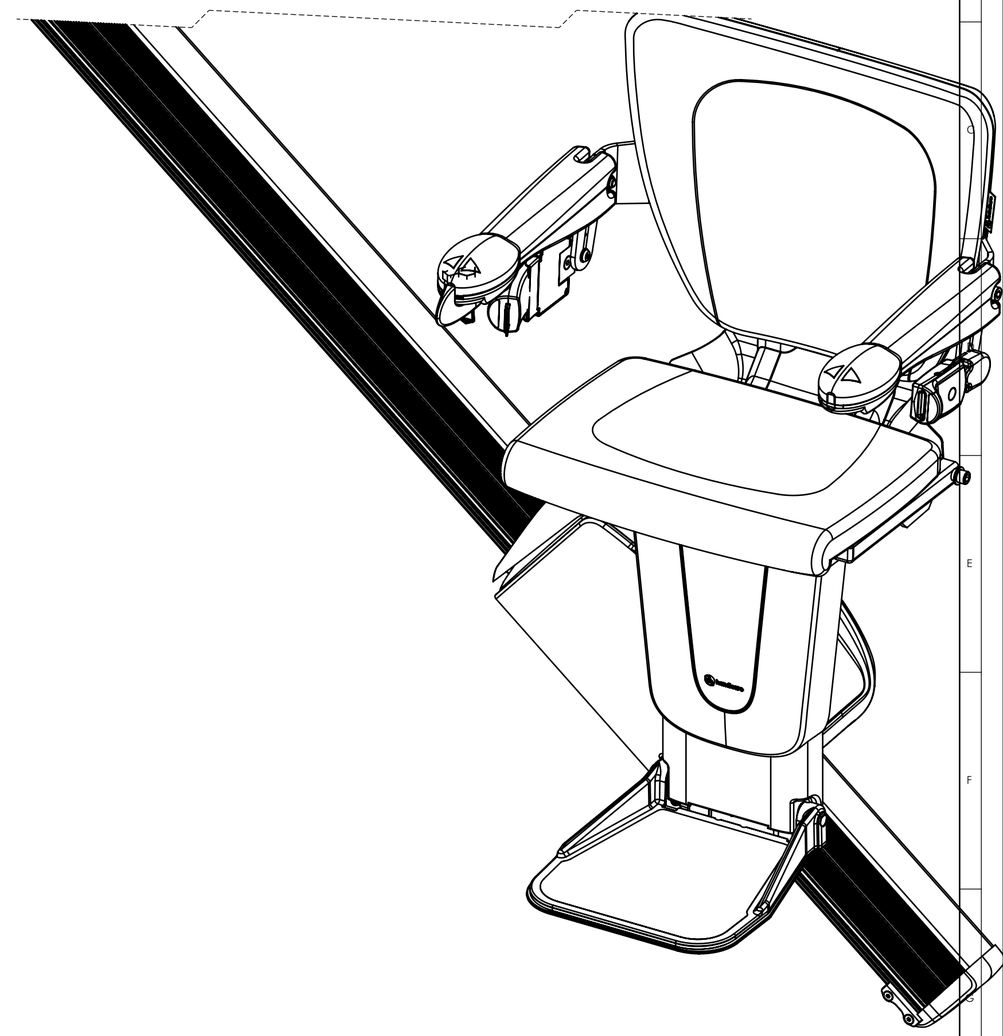

◯ = Critical to quality.

Tolerance unless otherwise indicated: mK	Remove all sharp edges. No finish on thread.	Tolerance principle conform ISO 8015	All dimensions are in mm unless otherwise indicated.

Material :
Finish :
Color :

Drawn by : SHO
Date : 21-09-2026
Scale : 1:5

Released by : JVE
Date : 21-09-2026
Checked by : JVE

Sheet 1 / Total sheets 1

Projection:

Description: **1100 SPECIFICATION**

Format: A2

handicare
www.handicare.com

This drawing is the property of Handicare and may not be reproduced, published or used for manufacturing without express written permission of Handicare.

Part number: **AA36628**

Revision: **10**

AA20687_11