Rev.	Description	By	Date
10	RELEASE	ES	16-01-2024

SPECIFICATION:

MAXIMUM USER LOAD: 4000 STANDARD: 136 kg (300 lb)
4000 HEAVY DUTY: 160 kg (350 lb)
STAIRFRIEND23 : 160 kg (350 lb)

NUMBER OF PERSONS: 1 PERSON

RATED SPEED: 4000 STANDARD: 0.12m/s (23.6 ft/min)
4000 HEAVY DUTY: 0.1m/s (20 ft/min)
STAIRFRIEND23 : 0.1m/s (20 ft/min)

MAXIMUM INCLINATION: UNITED STATES OF AMERICA: 45°
AUSTRALIA: 45°
REST OF THE WORLD: 56°

MINIMUM INCLINATION: WORLDWIDE: 0°

RAIL LENGTH: MAXIMUM LENGTH FOR 10 SINGLE JOURNEYS IN ONE HOUR:
AVG. STAIRWAY ANGLES UP TO 45°, STANDARD: 18m
AVG. STAIRWAY ANGLES UP TO 45°, HEAVY DUTY: 15m

AVG. STAIRWAY ANGLES OVER 45°, STANDARD: 15m
AVG. STAIRWAY ANGLES OVER 45°, HEAVY DUTY: 12m

POSITION ON STAIRS: LEFT OR RIGHT HAND (APPLICATION DEPENDANT)

SEAT TYPES: 4000: SIMPLICITY; SMART; SMART PERCH; STYLE
STAIRFRIEND23: L SEAT; V SEAT

SEAT COLOURS: SIMPLICITY: SAND. SMART & SMART PERCH: SAND, RUBY, SLATE GREY.
STYLE: CHERRY RED, IVORY WHITE, VANILLA BEIGE.

CONTROL POSITIONS: SIMPLICITY: RIGHT HAND. SMART AND SMART PERCH: LEFT OR RIGHT HAND.
STYLE: RIGHT HAND.

FOOTPLATE OPTIONS: 4000: MANUAL OR POWERED FROM ARM
STAIRFRIEND23: MANUAL

SWIVEL OPTIONS: 4000: MANUAL OR POWERED (SMART & STYLE ONLY)
STAIRFRIEND23: MANUAL

SEAT BELT TYPES: RETRACTABLE C&RH, RETRACTABLE C&LH, VELCRO, VELCRO XXL

SEAT ARMS: STANDARD, SHORT (STYLE AND SIMPLICITY ONLY)

BODY HARNESS: SMALL, MEDIUM, LARGE (SMART ONLY)

SEAT BASE: STANDARD, EXTENDED (SMART ONLY)

ARM SPACERS: STANDARD, SINGLE, DOUBLE (SMART AND SMART PERCH ONLY)

WELDING: HANDICARE SPEC03 APPLIES. ONLY STEELS ARE WELDED

POWER SUPPLY: SINGLE PHASE SUPPLY: MOSO MSA-Z1000WR330-036F0-N

SAFETY DEVICES: TYPE A

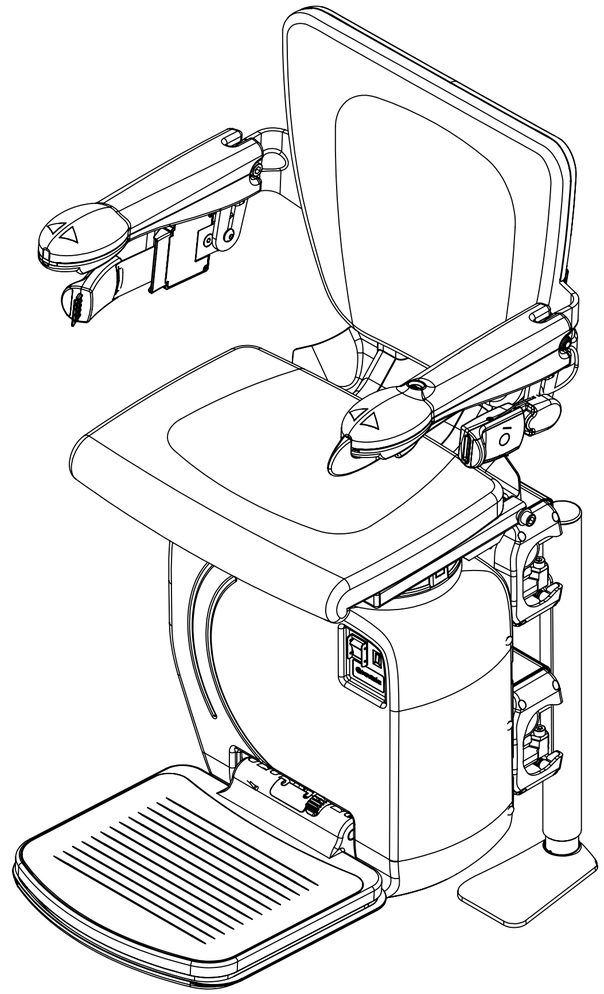

INSPECTION REQUIREMENTS FOR US: ASME 18.1; ASME 17.5; NFPA 70
INSPECTION REQUIREMENTS FOR EUROPE: EN81-40 ANNEX C

ANY ALTERATIONS TO THE INSTALLATION MUST BE RETESTED IN ACCORDANCE WITH THE ABOVE.

= Critical to quality.

Tolerance unless otherwise indicated: ISO 2768 mK	Remove all sharp edges. No finish on thread.	Tolerance principle conform ISO 8015	All dimensions are in mm unless otherwise indicated.

Material :
Finish :
Color :

Drawn by : ES
Date : 10-01-2024
Scale : 1:10

Released by : ES
Date : 16-01-2024
Checked by : PS

Sheet 1 / Total sheets 13

Projection:

Description: **4000/S23 - GENERAL ASSEMBLY**

Format: A2

handicare
www.handicare.com

This drawing is the property of Handicare and may not be reproduced, published or used for manufacturing without express written permission of Handicare.

Part number: **AA27130**

Revision: **10**

Rev.	Description	By	Date
10	RELEASE	ES	16-01-2024

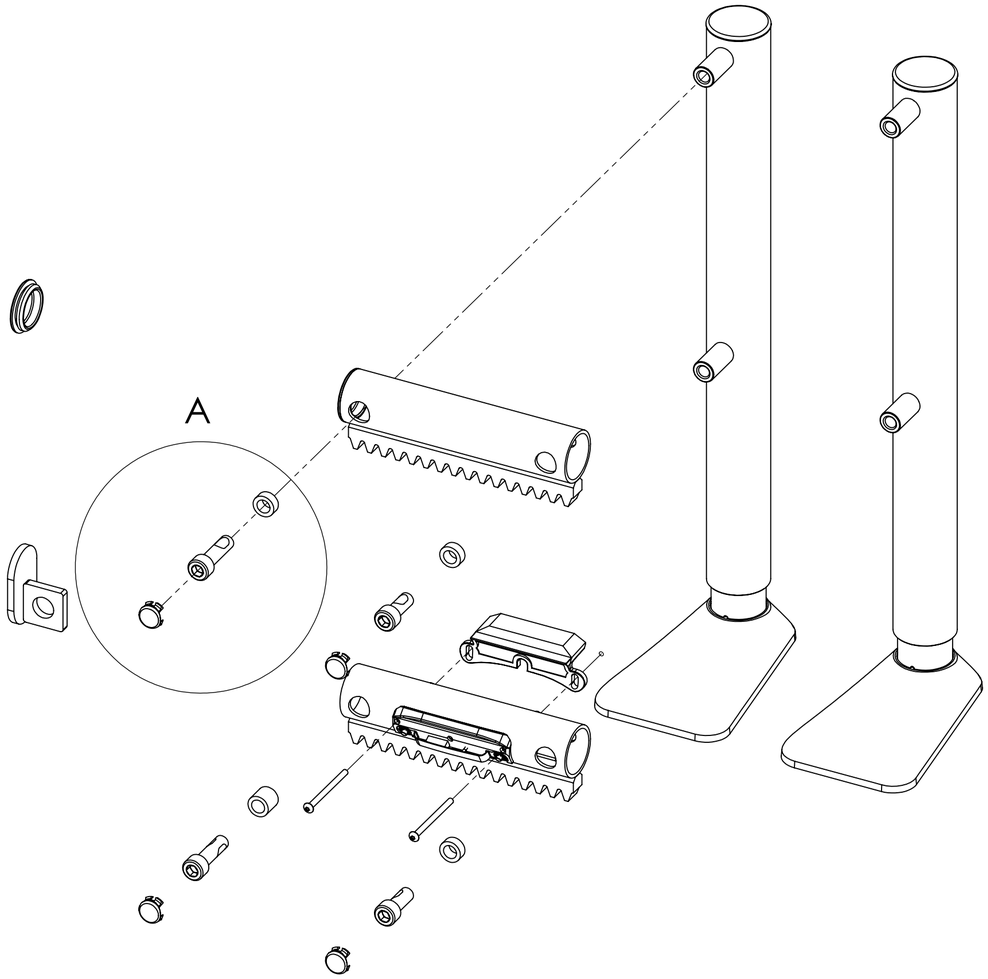

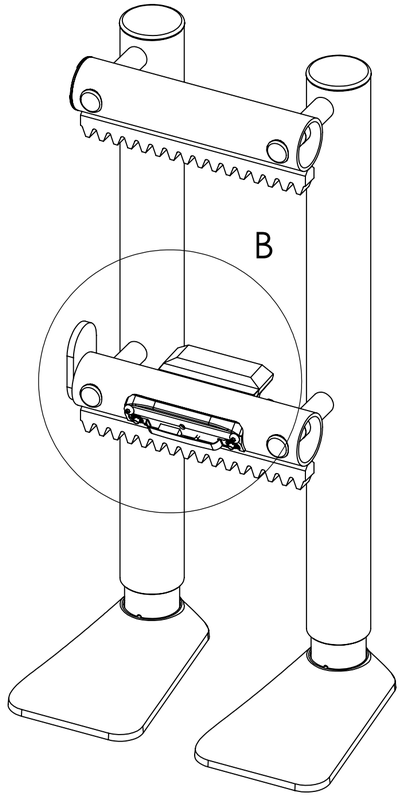

DETAIL B
SCALE 1 : 1

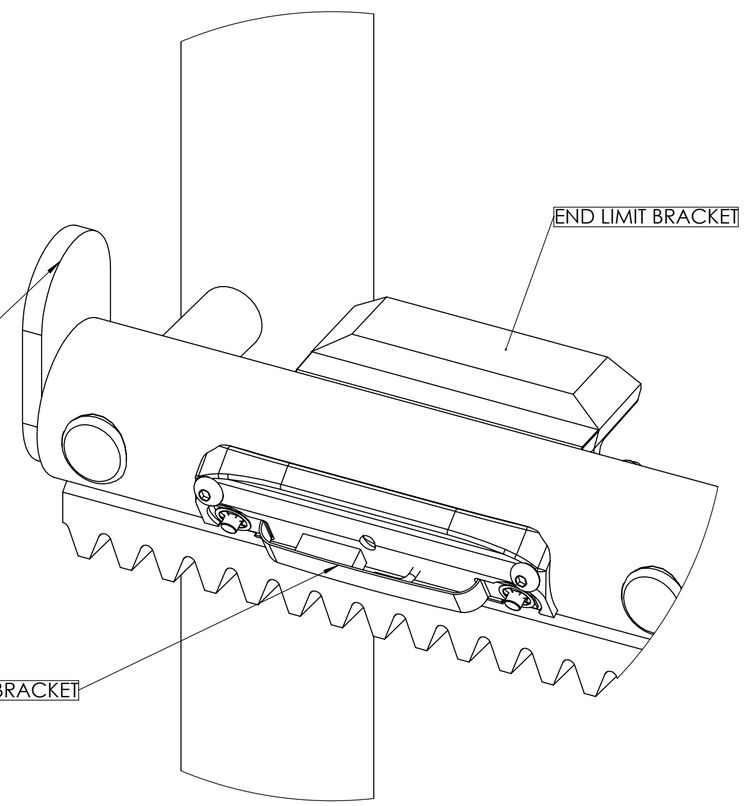

DETAIL A
SCALE 1 : 1

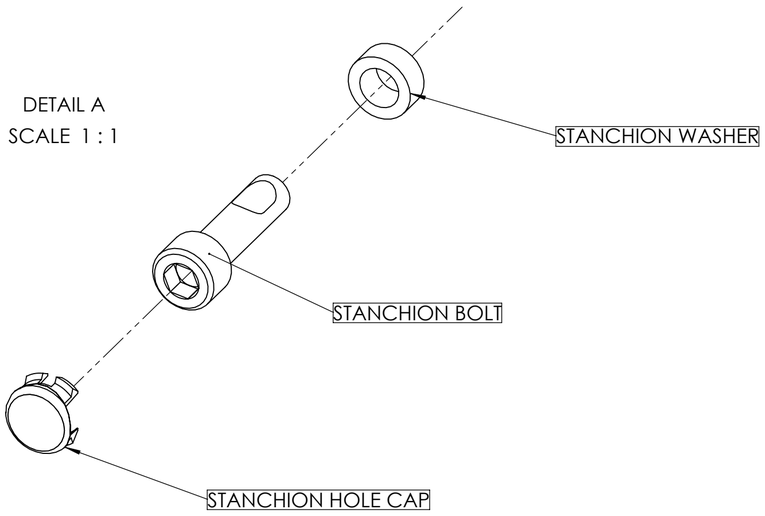

◯ = Critical to quality.

Tolerance unless otherwise indicated: ISO 2768 mK	Remove all sharp edges. No finish on thread.	Tolerance principle conform ISO 8015	All dimensions are in mm unless otherwise indicated.

Material : Finish : Color :	Drawn by : ES Date : 10-01-2024 Scale : 1:10	Released by : ES Date : 16-01-2024 Checked by : PS	Sheet 2 / Total sheets 13

Projection:

Description: **4000/S23 - GENERAL ASSEMBLY**

Format: A2

handicare
www.handicare.com

This drawing is the property of Handicare and may not be reproduced, published or used for manufacturing without express written permission of Handicare.

Part number: **AA27130**

Revision: **10**

AA20687_10

Rev.	Description	By	Date
10	RELEASE	ES	16-01-2024

MINIMUM LANDING REQUIREMENTS

WHEN RECOMMENDING A STAIRLIFT SOLUTION FOR A USER IT SHOULD ALWAYS BE AN OBJECTIVE TO PROVIDE THE SAFEST, LONG TERM SPECIFICATION TO MEET THE USERS NEEDS. THIS SHOULD IDEALLY INCLUDE ENABLING THE USER TO TRAVEL THE FULL LENGTH OF THE STAIRCASE WITHOUT THE NEED TO CLIMB ANY STEPS. THERE ARE SOME SITUATIONS HOWEVER DUE TO THE DESIGN OF THE STAIRCASE AND HOUSE THAT IT IS NOT FEASIBLE TO DO THIS.

ONE SUCH SITUATION IS WHERE THERE IS A QUARTER LANDING AT THE BOTTOM OF THE STAIRCASE WHICH MAY BE ONE TO TWO STEPS ABOVE GROUND LEVEL. IN THESE SITUATIONS I.E. WHERE THERE IS A FULL QUARTER LANDING, THE RISK FOR THE USER TO GET ON OR OFF A STAIRLIFT ON THE QUARTER LANDING MAY BE DEEMED AS LESS HAZARDOUS THAN CLIMBING THE FULL FLIGHT OF STAIRS UNAIDED.

HANDICARE OFFER THE FOLLOWING GUIDELINES TO HOW A LIFT CAN START ON A QUARTER LANDING, HOWEVER WE CANNOT ADVISE ON HOW SAFE THIS WILL BE FOR THE USER AS INDIVIDUALS HAVE VARYING ABILITIES.

IT IS THE RESPONSIBILITY OF THE PERSON ASSESSING THE USER TO CHECK THEY ARE BOTH SAFE TO TAKE A COUPLE OF STEPS AND SIT ON THE STAIRLIFT AND THAT THEY ALSO UNDERSTAND THE IMPLICATIONS OF THIS.

IF A CUSTOMER WISHES TO START THEIR STAIRLIFT TRACK ON A QUARTER LANDING THE FOLLOWING CRITERIA MUST BE MET:

1. THE SEAT MUST HAVE A POWERED FOOTPLATE THAT IS OPERATED FROM A SWITCH UNDER THE ARM OF THE SEAT. THIS WILL LEAVE THE AREA IN FRONT OF THE STAIRLIFT FREE GIVING MORE ROOM TO MANOEUVRE.

2. THE USER MUST BE ABLE TO MOVE THEIR LEGS ONCE SEATED TO ALLOW THE FOOTPLATE TO FOLD AND UNFOLD WITHOUT IT HITTING THE BACK OF THEIR LEGS.

THERE SHOULD ALSO BE ENOUGH ROOM BETWEEN THE EDGE OF THE SEAT AND THE NOSE OF THE TREAD (DIM A) TO ALLOW THE USER TO TURN AROUND TO SIT ON THE SEAT, I.E. A MINIMUM OF 360mm. WE BELIEVE A MEASUREMENT LESS THAN THIS WOULD MAKE IT UNSAFE FOR THE USER TO TURN TO SIT DOWN.

WE RECOMMEND THAT THESE DIMENSIONS ARE HIGHLIGHTED TO THE CUSTOMER/USER AND ALSO DETAILED ON QUOTATIONS.

IT IS NOT ACCEPTABLE TO START A LIFT PART WAY UP A STAIRCASE WHERE THE USER HAS TO BALANCE ON A SINGLE STANDARD TREAD IN ORDER TO MOUNT THE STAIRLIFT.

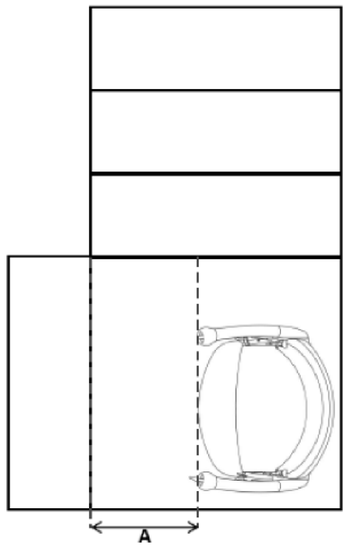

min. 360 mm

REMOTE CONTROLS

CONTROLS SHALL BE 1200mm MAXIMUM AND 380mm MINIMUM ABOVE THE PLATFORM FLOOR OR FACILITY FLOOR OR GROUND LEVEL.

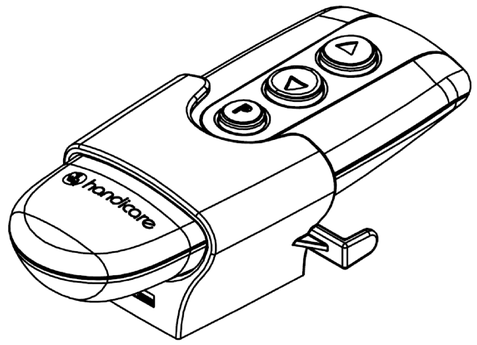

= Critical to quality.

Tolerance unless otherwise indicated: ISO 2768 mK	Remove all sharp edges. No finish on thread.	Tolerance principle conform ISO 8015	All dimensions are in mm unless otherwise indicated.
Material : Finish : Color :	Drawn by : ES Date : 10-01-2024 Scale : 1:10	Released by : ES Date : 16-01-2024 Checked by : PS	Sheet 3 / Total sheets 13
Projection:	Description: **4000/S23 - GENERAL ASSEMBLY**		Format: A2
handicare www.handicare.com	This drawing is the property of Handicare and may not be reproduced, published or used for manufacturing without express written permission of Handicare.	Part number: **AA27130**	Revision: **10**

AA20687_11

Rev.	Description	By	Date
10	RELEASE	ES	16-01-2024

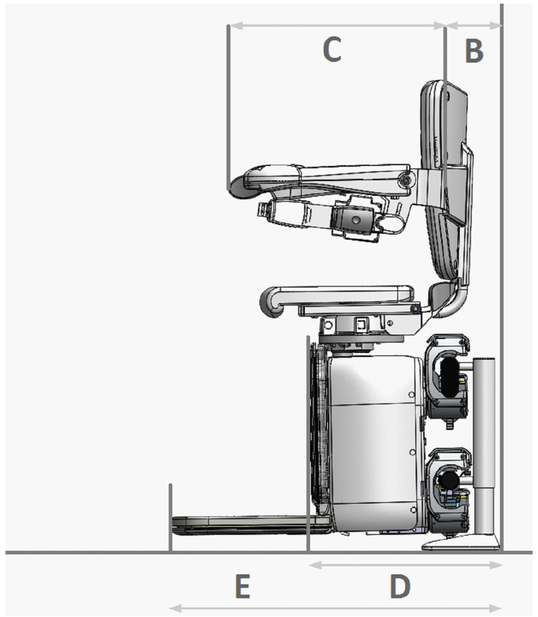

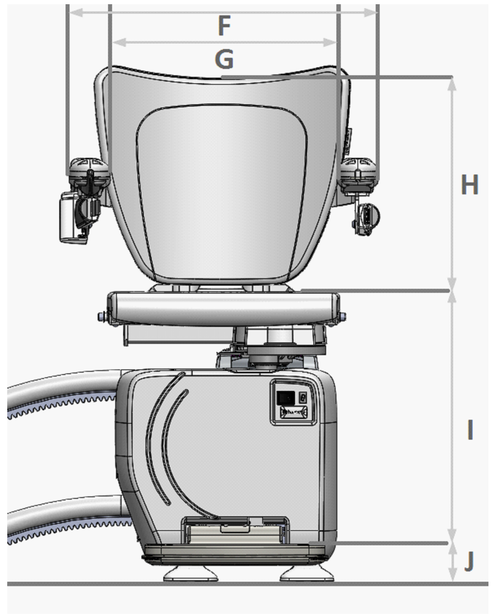

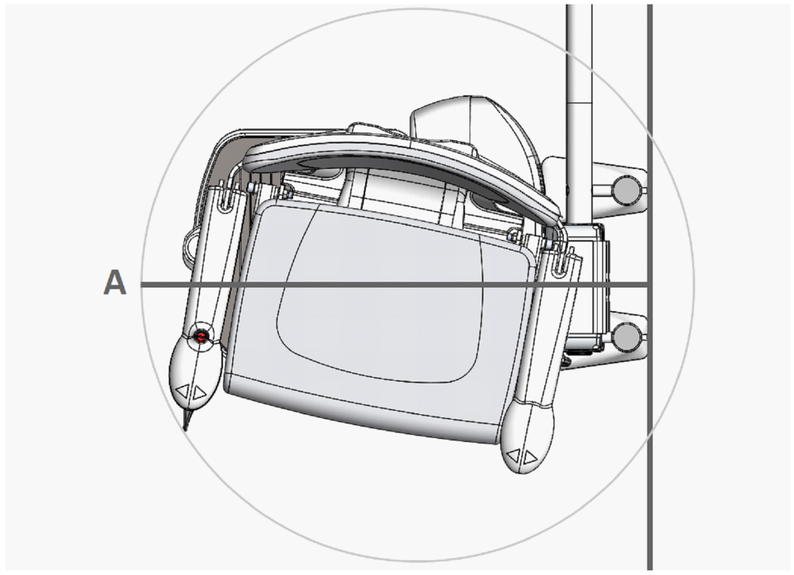

DIM.	DESCRIPTION	STYLE / SIMPLICITY	SMART	SMART PERCH	
A	MINIMUM SWIVEL RADIUS	735	700-750	-	mm
	WITH SHORT ARMREST	700	-	-	mm
B	WALL TO INNER SEAT BACK	110	130	130	mm
C	SEAT DEPTH	390	360-425	360	mm
D	MINIMUM FOLDED WIDTH TO FOOTPLATE	405	405	405	mm
E	MINIMUM OPEN WIDTH TO FOOTPLATE EDGE	695	695	695	mm
	TO SMALL FOOTPLATE	635	635	635	mm
	TO OFFSET FOOTPLATE	655	655	655	mm
F	ARMREST WIDTH - EXTERNAL	585	530-630	530-630	mm
G	ARMREST WIDTH - INTERNAL	430	410-510	410-510	mm
H	SEAT BACK HEIGHT	400	455	455	mm
	FOOTPLATE RAKE ADJUSTMENT	50	50	-	mm
I	FOOTPLATE TO SEAT HEIGHT	470-550	490-590	625-750	mm
	WITH FOOTPLATE RAKE ADJUSTMENT	420-500	440-540	-	mm
J	MINIMUM FOOTPLATE HEIGHT	70*	70*	70*	mm
	MINIMUM TRACK INTRUSION INTO STAIRCASE	125	125	125	mm
	STANDARD WEIGHT LIMIT	136 21	136 21	136 21	kg st.
	HEAVY DUTY WEIGHT LIMIT	160 25	160 25	160 25	kg st.
	SPEED	0.12	0.12	0.12	m/sec
	MAXIMUM STAIRCASE ANGLE	56	56	56	deg.

*AT HORIZONTAL LANDINGS

= Critical to quality.

Tolerance unless otherwise indicated: ISO 2768 mK	Remove all sharp edges. No finish on thread.	Tolerance principle conform ISO 8015	All dimensions are in mm unless otherwise indicated.

Material :
Finish :
Color :

Drawn by : ES
Date : 10-01-2024
Scale : 1:10

Released by : ES
Date : 16-01-2024
Checked by : PS

Sheet 4 / Total sheets 13

Projection:

Description: **4000/S23 - GENERAL ASSEMBLY**

Format: A2

handicare
www.handicare.com

This drawing is the property of Handicare and may not be reproduced, published or used for manufacturing without express written permission of Handicare.

Part number: **AA27130**

Revision: **10**

AA20687_11

Rev.	Description	By	Date
10	RELEASE	ES	16-01-2024

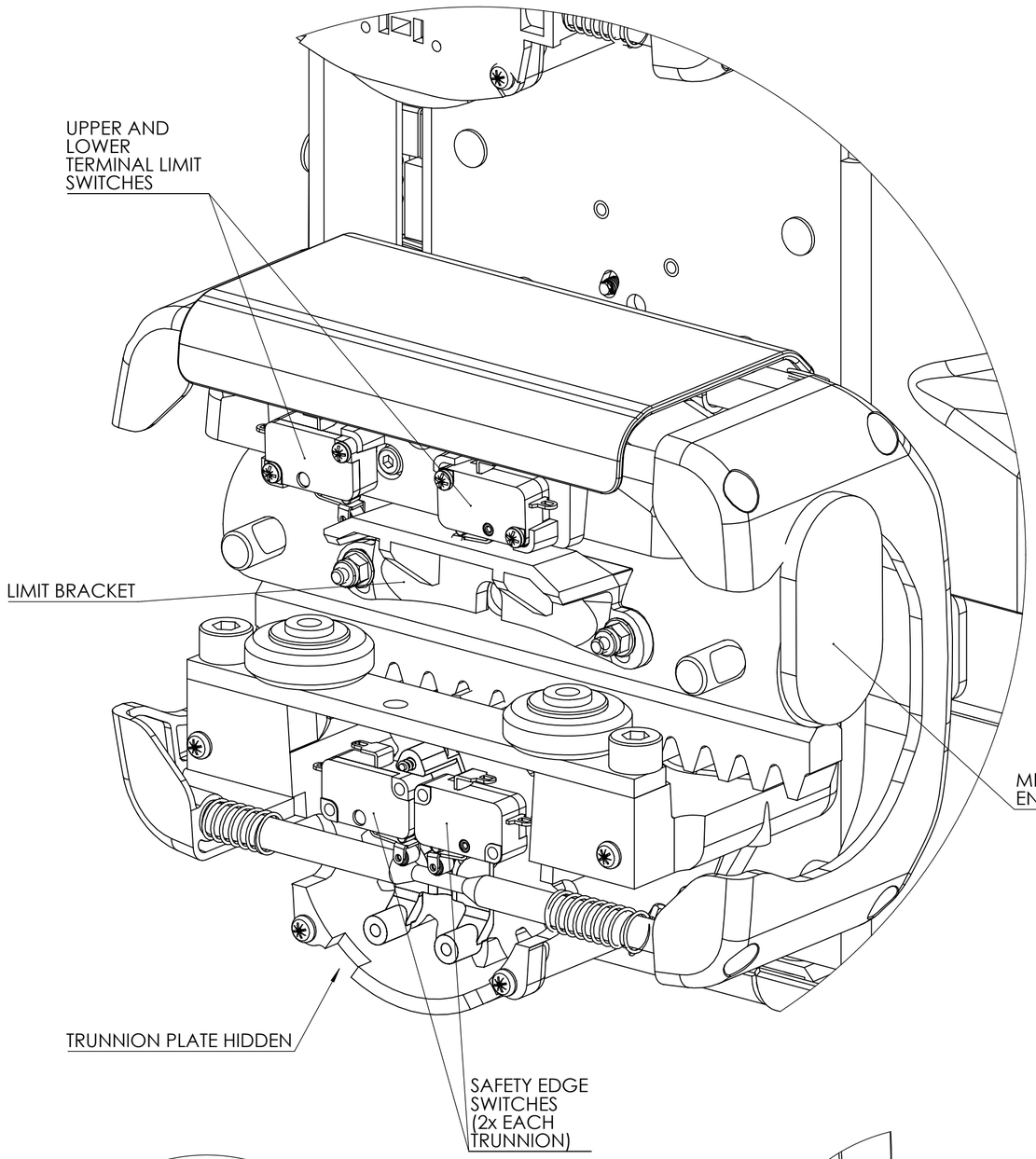

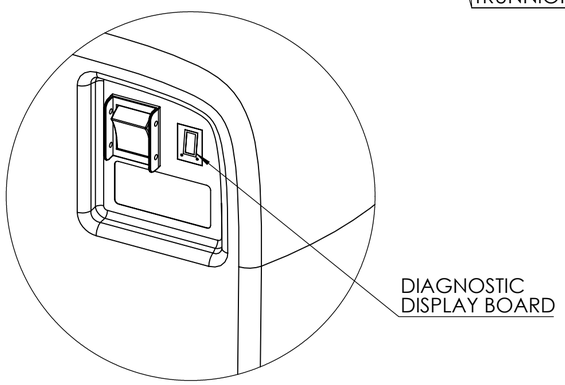

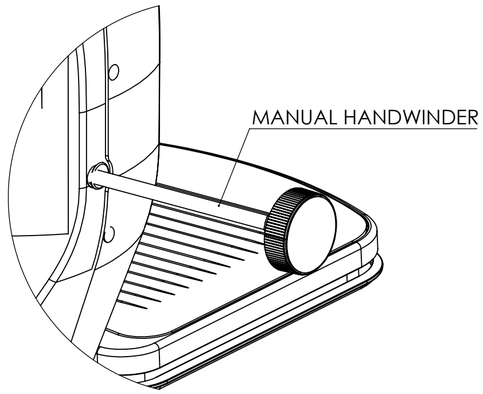

TERMINAL LIMIT AND FINAL TERMINAL LIMIT ACTIVIATION

1. THE FINAL LIMIT CONDITION IS ENTERED WHEN THE LEADING CARRIAGE (TRUNNION) SAFETY EDGE SWITCH AND THE TRAILING TERMINAL LIMIT SWITCH ARE BOTH OPERATED IN THE DIRECTION OF TRAVEL.

2. UNDER NORMAL OPERATION, AT THE END OF TRAVEL THE LEADING TERMINAL SWITCH WILL ENGAGE WITH THE LIMIT BRACKET. THIS ALERTS THE HAN125 CONTROL PCBA AND THE LIFT STOPS.

3. IF STEP 2 FAILS AND THE LIFT CONTINUES TO TRAVEL, (A) THE LEADING SAFETY EDGE WILL ENGAGE WITH THE MECHANICAL END STOP AND OPERATE THE SAFETY SWITCHES INSIDE THE TRUNNION AND (B) THE TRAILING TERMINAL LIMIT SWITCH WILL ENGAGE WITH THE CHARGE CONTACT BRACKET.

4. WITH BOTH THE LEADING SAFETY SWITCH AND TRAILING TERMINAL LIMIT SWITCH ACTIVATED, THE LIFT IS IN THE FINAL LIMIT CONDITION; THE LIFT WILL NOT RUN UP OR DOWN AND WILL NOT BE ABLE TO MOVE WITHOUT MANUAL HANDWINDING.

5. IF THE LIFT IS POWERED OFF AND ON IN THE FINAL LIMIT CONDITION THE LIFT WILL NOT MOVE WITHOUT MANUAL HANDWINDING.

6. IN THE FINAL LIMIT CONDITION CODES 4&5 OR 6&3 WILL SHOW ON THE DIAGNOSTIC DISPLAY BOARD DEPENDING ON HAND OF INSTALLATION AND POSITION ON THE RAIL SYSTEM.

7. IF THE UPPER OR LOWER TERMINAL LIMIT SWITCH SHORTS TO GROUND, THE SAFETY CIRCUIT IS ACTIVATED AND THE LIFT WILL NOT BE ABLE TO MOVE.

8. IF THE SAFETY EDGE SWITCHES SHORTS TO GROUND, THE SAFETY CIRCUIT IS ACTIVATED THE LIFT WILL NOT BE ABLE TO MOVE.

IN-SERVICE TEST PROCEDURE FOR TERMINAL LIMIT AND FINAL TERMINAL LIMIT ACTIVIATION

1. REMOVE THE UPPER OR LOWER TERMINAL LIMIT SWITCH FROM ITS BRACKET.

2. DRIVE THE LIFT TO THE END OF THE RAIL, (IF LOWER LIMIT SWITCH REMOVED DRIVE LIFT DOWN, IF UPPER LIMIT SWITCH REMOVED DRIVE LIFT UP)

3. THE SAFETY EDGE WILL ENGAGE WITH THE MECHANICAL END STOP, AND STEP 4 FROM THE ABOVE LIST WILL OCCUR.

4. CHECK IF CODES 4&5 OR 6&3 SHOW ON THE DIAGNOSTIC DISPLAY BOARD. IF SO, THE LIFT IS NOW SET INTO A FINAL STATE. IT WILL NOT RUN UP OR DOWN.

5. USING THE MANUAL HANDWINDER, MOVE THE LIFT OFF THE MECHANICAL END STOP.

6. RE-ATTACHED THE REMOVED TERMINAL LIMIT SWITCH. CHECK THAT THE LIFT IS FULLY FUNCTIONAL.

4 **Code:** 4	6 **Code:** 6
5 **Code:** 5	3 **Code:** 3

⬭ = Critical to quality.

Tolerance unless otherwise indicated: ISO 2768 mK	Remove all sharp edges. No finish on thread.	Tolerance principle conform ISO 8015	All dimensions are in mm unless otherwise indicated.

Material :
Finish :
Color :

Drawn by : ES
Date : 10-01-2024
Scale : 1:10

Released by : ES
Date : 16-01-2024
Checked by : PS

Sheet **5** / Total sheets **13**

Projection:

Description: **4000/S23 - GENERAL ASSEMBLY**

Format: A2

handicare
www.handicare.com

This drawing is the property of Handicare and may not be reproduced, published or used for manufacturing without express written permission of Handicare.

Part number: **AA27130**

Revision: **10**

AA20687_10

Rev.	Description	By	Date
10	RELEASE	ES	16-01-2024

SENSITIVE EDGE DEFINITIONS:

THERE ARE THREE POSITIVE BREAK MICROSWITCHES (UPSIDE, DOWNSIDE, AND UNDERSURFACE) LOCATED IN THE FOOTPLATE LOWER MOULDING. TWO SPRINGS ARE USED TO RETURN THE FOOTPLATE LOWER MOULDING BACK TO ITS NORMAL POSITION WHEN THE OBSTRUCTION HAS BEEN REMOVED.

WHEN AN OBSTACLE COLLIDES WITH THE FOOTPLATE LOWER MOULDING, THE POSITIVE BREAK MICROSWITCH MAKES CONTACT WITH THE FOOTPLATE UPPER MOULDING, OPENING THE SWITCHES CAUSING A BREAK IN THE NORMALLY CLOSED SAFETY EDGE LOOPS. THIS ALERTS THE HAN125 PCB THAT THE SAFETY EDGE HAS BEEN ACTIVATED, CAUSING THE LIFT TO STOP IMMEDIATELY.

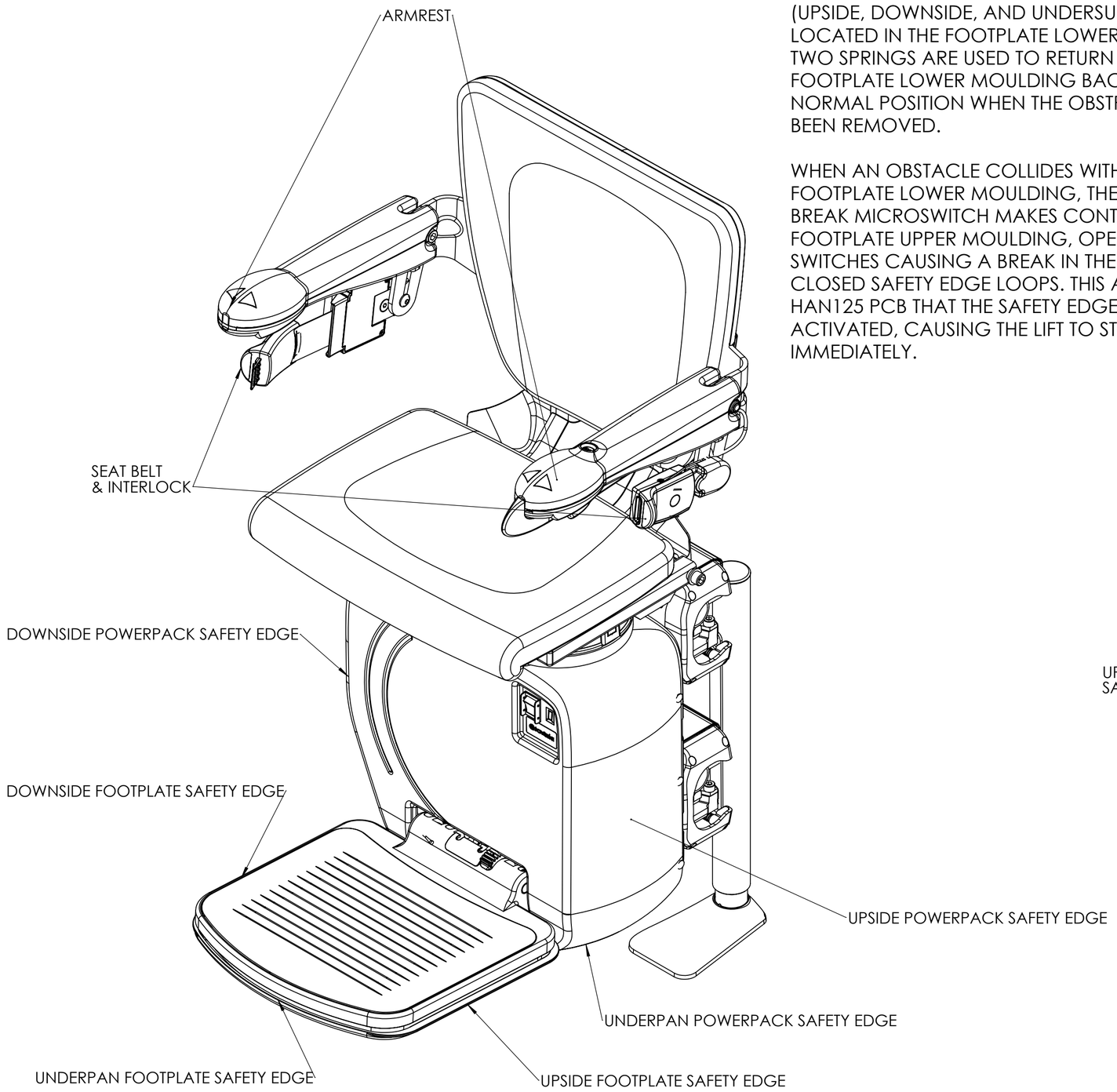

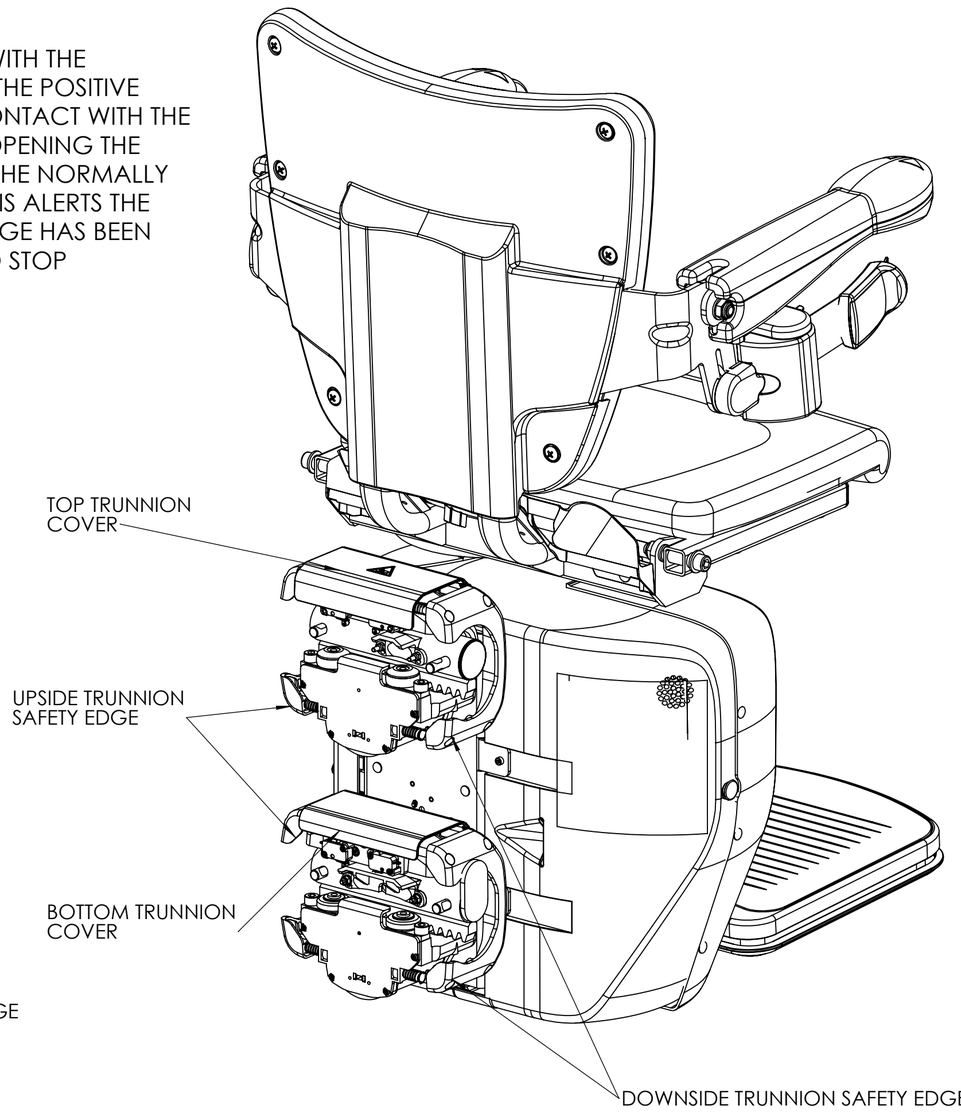

⬭ = Critical to quality.

Tolerance unless otherwise indicated: ISO 2768 mK	Remove all sharp edges. No finish on thread.	Tolerance principle conform ISO 8015	All dimensions are in mm unless otherwise indicated.
Material : Finish : Color :		Drawn by : ES Date : 10-01-2024 Scale : 1:10	Released by : ES Date : 16-01-2024 Checked by : PS
Sheet 6 / Total sheets 13			
Projection:	Description: **4000/S23 - GENERAL ASSEMBLY**		Format: A2
handicare www.handicare.com	This drawing is the property of Handicare and may not be reproduced, published or used for manufacturing without express written permission of Handicare.	Part number: **AA27130**	Revision: **10**

Rev.	Description	By	Date
10	RELEASE	ES	16-01-2024

OSG OPEN

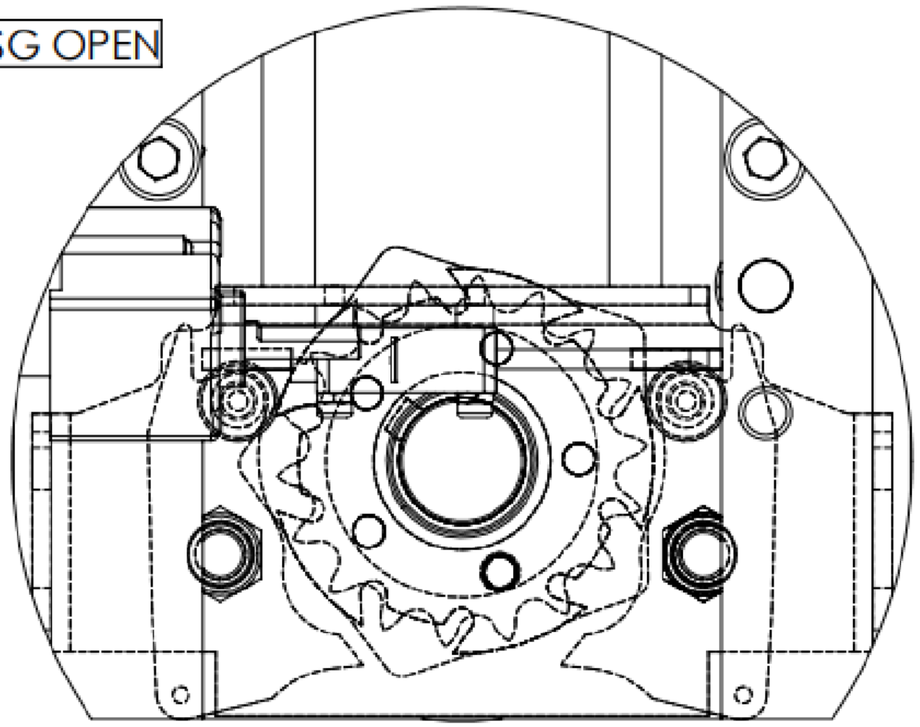

OSG ENGAGED

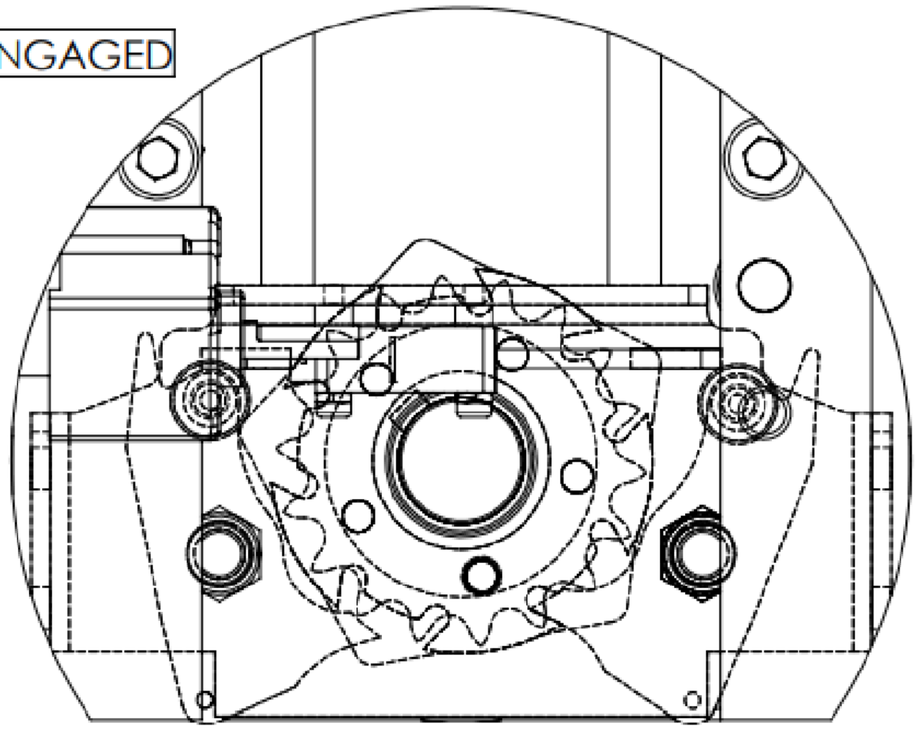

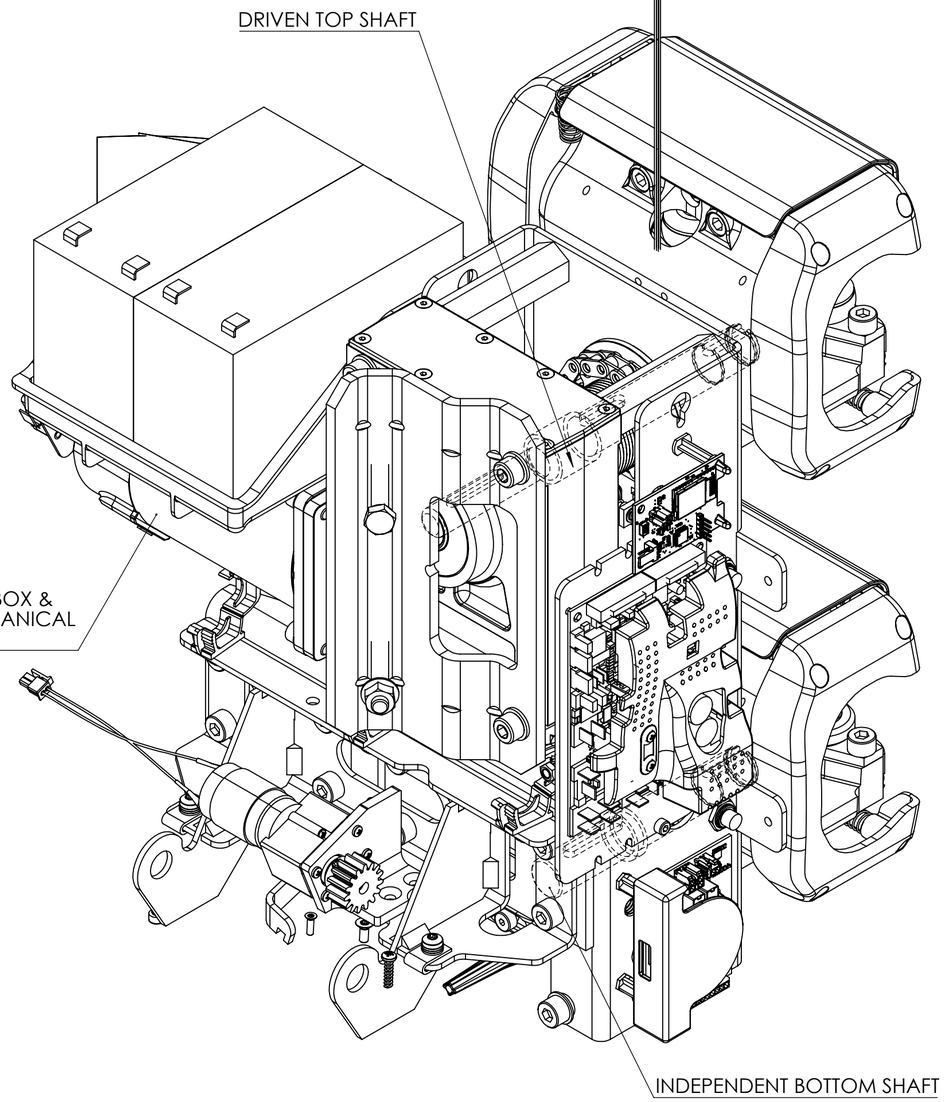

(136 kg / 300 lb VERSION SHOWN)

⬭ = Critical to quality.

Tolerance unless otherwise indicated: ISO 2768 mK	Remove all sharp edges. No finish on thread.	Tolerance principle conform ISO 8015	All dimensions are in mm unless otherwise indicated.

Material :
Finish :
Color :

Drawn by : ES
Date : 10-01-2024
Scale : 1:10

Released by : ES
Date : 16-01-2024
Checked by : PS

Sheet 7 / Total sheets 13

Projection:

Description: **4000/S23 - GENERAL ASSEMBLY**

Format: A2

handicare
www.handicare.com

This drawing is the property of Handicare and may not be reproduced, published or used for manufacturing without express written permission of Handicare.

Part number: **AA27130**

Revision: **10**

AA20687_10

Rev.	Description	By	Date
10	RELEASE	ES	16-01-2024

MECHANICAL LEVELED SYSTEM
TWIN RACK MAINTAINS VERTICAL
ORIENTATION

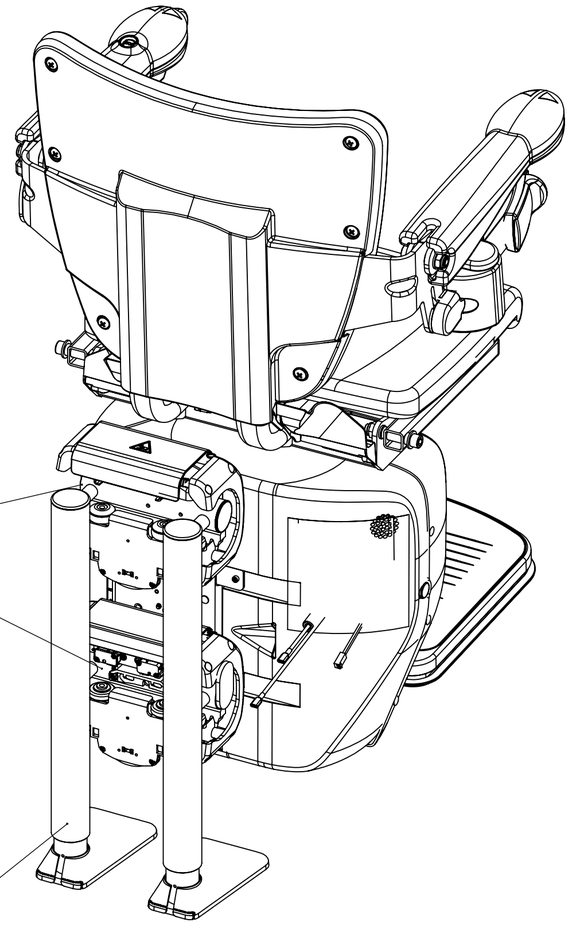

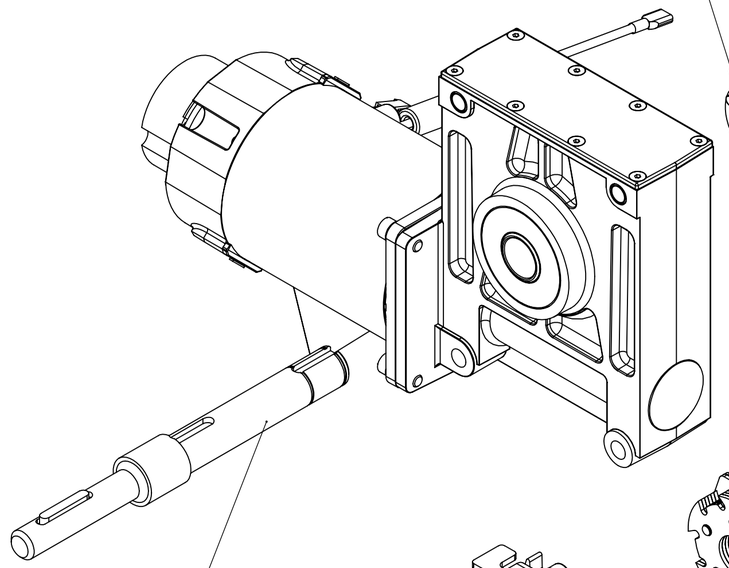

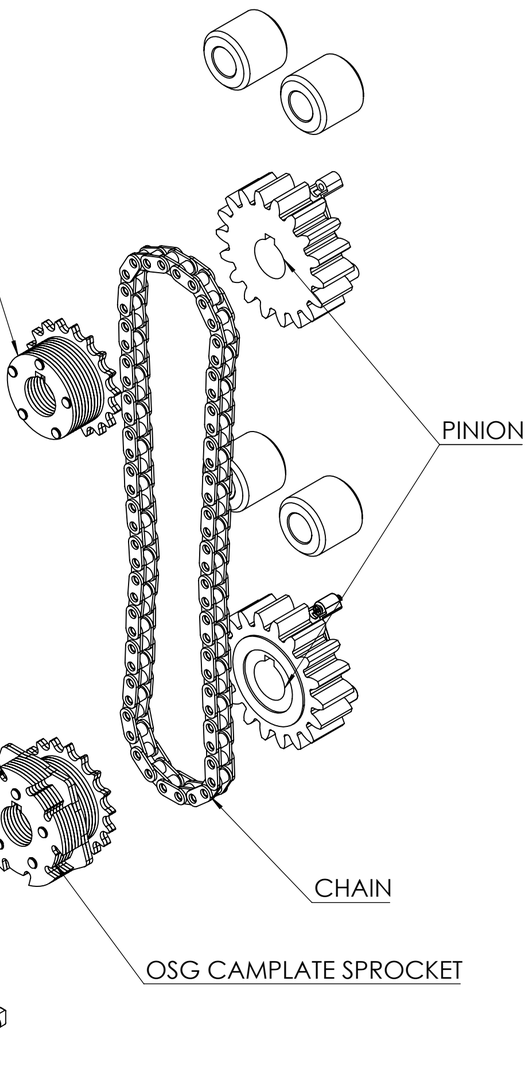

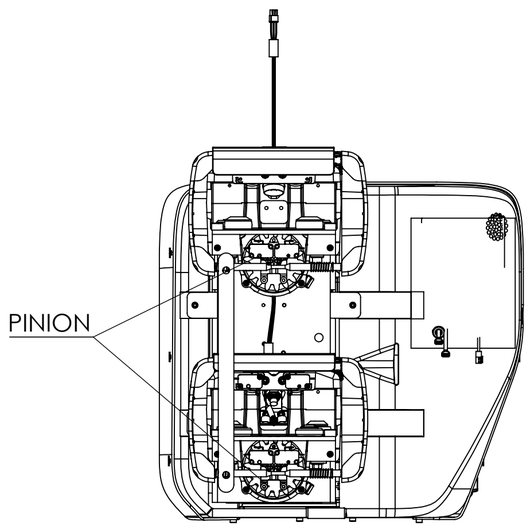

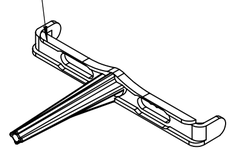

⬭ = Critical to quality.

Tolerance unless otherwise indicated: ISO 2768 mK	Remove all sharp edges. No finish on thread.	Tolerance principle conform ISO 8015	All dimensions are in mm unless otherwise indicated.

Material :	Drawn by : ES	Released by : ES	Sheet	Total sheets
Finish :	Date : 10-01-2024	Date : 16-01-2024	**8**	**/ 13**
Color :	Scale : 1:10	Checked by : PS		

Projection:

Description: **4000/S23 - GENERAL ASSEMBLY**

Format: A2

handicare
www.handicare.com

This drawing is the property of Handicare and may not be reproduced, published or used for manufacturing without express written permission of Handicare.

Part number: **AA27130**

Revision: **10**

Rev.	Description	By	Date
10	RELEASE	ES	16-01-2024

BATTERY POSITIVE LOOM

DWG No: AA26602

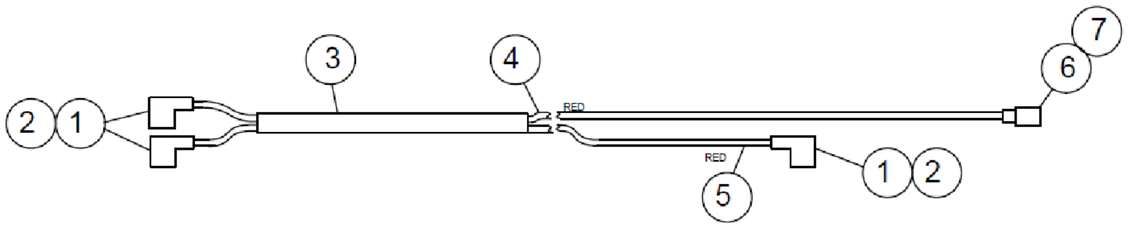

REV	BY	COMMENTS	DATE
A	VM	INITIAL DRAWING	11-03-22

ITEM	MANUFACTURERS REF	DESCRIPTION	LENGTH (MM)	QTY
1	JST SFO-1.0T-250N	FLAG 250, FEMALE, 6.3 X 0.8, UNINSULATED	-	3
2	JST SHB-900C	INSULATION HOUSING FOR ITEM 1	-	3
3		BLACK SLEEVING, PVC, UL RATED, 6MM DIAMETER	200	1
4		RED CABLE, 14AWG, UL1015	800	1
5		RED CABLE, 14AWG, UL1015	510	1
6		FASTON 187, FEMALE, 4.8 X 0.8, UNINSULATED		
7		INSULATION HOUSING FOR ITEM 6	-	1
8				
9				

BATTERY LINK LOOM

Dwg No SIM24100



REV	BY	COMMENTS	DATE
10	VM	ECN 61_12	11-03-11

ITEM	PART NUMBER	MANUFACTURERS REF	DESCRIPTION	LENGTH (MM)	QTY
1	N/A		UNINSULATED CRIMP TERMINAL 4.8MMX0.8MM	-	2
2	N/A		INSULATING BOOT FOR ITEM 1	-	2
3	N/A		2.5MM SQ ORANGE CABLE TRI-RATED	150	1

BATTERY NEGATIVE LOOM

DWG No: AA26603

NOTES:

1 - USE EITHER FUSE FOR ITEM 6

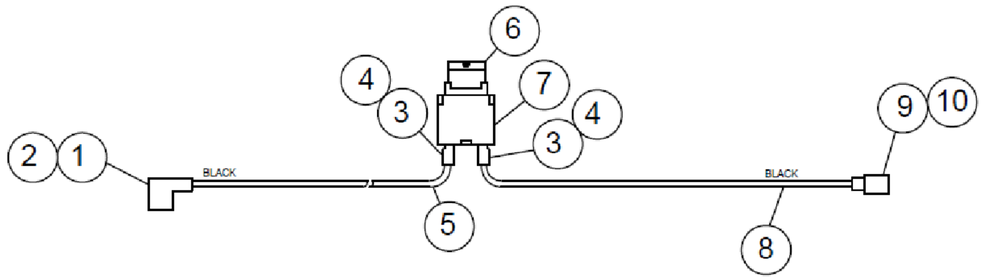

REV	BY	COMMENTS	DATE
A	VM	INITIAL DRAWING	11-03-22

ITEM	MANUFACTURERS REF	DESCRIPTION	LENGTH (MM)	QTY
1	JST SFO-1.0T-250N	FLAG 250, FEMALE, 6.3 X 0.8, UNINSULATED	-	1
2	JST SHB-900C	INSULATION HOUSING FOR ITEM 1	-	1
3	JST STO-21T-250N	FASTON 250, FEMALE, 6.3 X 0.8, UNINSULATED	-	2
4	JST CS-03N004V0	INSULATION HOUSING FOR ITEM 3	-	2
5		BLACK CABLE, 14AWG, UL1015	460	1
6	MTA 0700360/20	ATO TYPE BLADE FUSE 25A	-	1
6	LITTELFUSE ATOF 287	ATO TYPE BLADE FUSE 25A	-	1
7	FH210	INLINE FUSE HOLDER	-	1
8		BLACK CABLE, 14AWG, UL1015	200	1
9		FASTON 187, FEMALE, 4.8 X 0.8, UNINSULATED	-	1
10		INSULATION HOUSING FOR ITEM 9	-	1

◯ = Critical to quality.

Tolerance unless otherwise indicated: ISO 2768 mK	Remove all sharp edges. No finish on thread.	Tolerance principle conform ISO 8015	All dimensions are in mm unless otherwise indicated.

Material :
Finish :
Color :

Drawn by : ES
Date : 10-01-2024
Scale : 1:10

Released by : ES
Date : 16-01-2024
Checked by : PS

Sheet 9 / Total sheets 13

Projection:

Description: **4000/S23 - GENERAL ASSEMBLY**

Format: A2

handicare
www.handicare.com

This drawing is the property of Handicare and may not be reproduced, published or used for manufacturing without express written permission of Handicare.

Part number: **AA27130**

Revision: **10**

Rev.	Description	By	Date
10	RELEASE	ES	16-01-2024

WEIGHTS (MINUS RAILS + STANCHIONS):

SIMPLICITY SEAT	14.16	kg
SIMPLICITY SEAT STEM	1.96	kg
SMART SEAT BASE	8.98	kg
SMART SEAT BACK	4.24	kg
SMART SEAT UPHOLSTERY	2.76	kg
SMART SEAT STEM	1.82	kg
EXTENDED SMART SEAT BASE	9.28	kg
EXTENDED SMART SEAT UPHOLSTERY	2.92	kg
SMART SEAT ARM SPACER KIT 48mm	0.90	kg
STYLE SEAT	14.58	kg
STYLE SEAT STEM	2.48	kg
4000 STD POWERPACK	26.14	kg
4000 HD POWERPACK	26.66	kg
BATTERIES	5.18	kg
MAX. 4000 PRODUCT WEIGHT (MINUS RAILS & STANCHIONS)	**49.18**	**kg**

Product weight	49.18 kg
User weight (seat)	148 kg
User weight (fp)	28 kg
Total user weight	**176 kg**

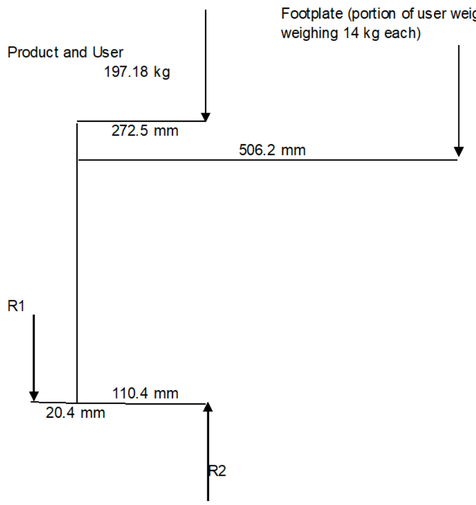

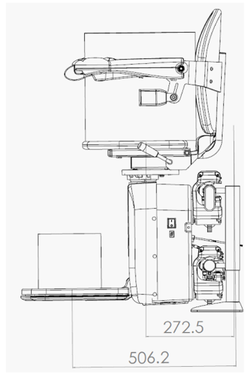

clockwise = anti-clockwise

therefore taking moments about R1

R2	x	130.8 =	526.6 x 28	+	292.9 x 197.18
R2	**=**	**554.2723 kg**	5437.412 **N**		

therefore taking moments about R2

R1	x	130.8 =	162.1 x 197	+	395.8 x 28
R1	**=**	**329.0923 kg**	3228.396 **N**		

Moments on stanchion	**666.1495215 Nm**	
	1118.203798 Nm	
	5437 N	Vertical Foot Load
	3228 N	Bolt Tensile Load

Downwards forces:

Total force in kg		225.18 kg
Total force in N		2209.016 N
Applied to each rail	**(M)**	**1104.508** N

Moments

	kg	N	L	
Product and User	197.18	1934.336	272.5	527.1065 Nm
Footplate Loading	28	274.68	506.2	139.043 Nm

Torque on track system		666.1495 Nm
Lug centre distance	**(D)**	0.238 m
Force on rack face rear top rail	**(F1)**	**1399.474 N**
Force on rack face front bottom rail	**(F2)**	**1399.474 N**

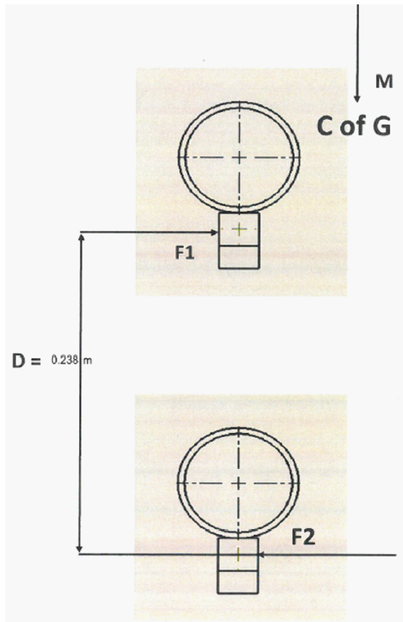

Part Number		AA18333 & AA23262
Pitch Diameter	PD	2.159538931
Chain Pitch	**P**	**0.375 inches**
Number of Teeth	**N**	**18 teeth**

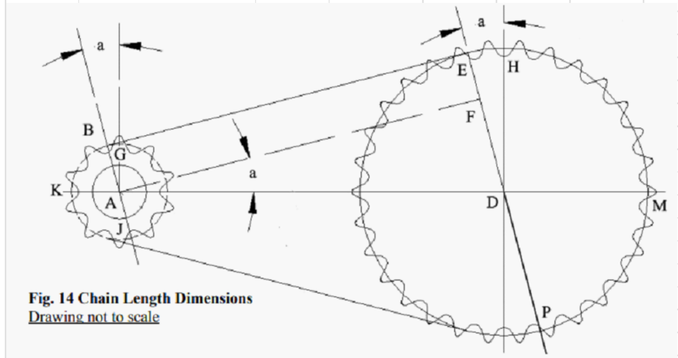

Fig. 14 Chain Length Dimensions
Drawing not to scale

Specifications:

Pitch (P) = ¼" = 0.250"
PR = Pitch Diameter x 0.5
Drive Sprocket (n) = 10 Teeth
Driven Sprocket (N) = 30 Teeth
Center Distance (C) = 6"/0.250 = 24 (expressed in pitch units

The chain length = 2 (Tangent line length BE + arc ME + arc BK)

Pitch	P	0.375	
Drive Sprocket	n	18	teeth
Driven Sprocket	N	18	teeth
Centre Distance	C	9.370079	inches

Pitch Circle Radius	AB	1.079769466	
PCR for driven sprocket	DE	1.079769466	
Length of side DF	DF	0	
Angle a	a	0	
cos a		1	
	BE	24.98687664	
	ME	4.5	
	KB	4.5	
Length of Chain	**L**	**67.97375328**	**Pitch Units**
Length of Chain	L	68	Pitch Units

Chain Length = 2 (Tangent line length BE + arc ME + arc BK)

$$L = 2\left[C\cos a + \frac{N+n}{4} + \frac{a}{360}(N-n)\right]$$

Calculating Center Distance

Calculated Pitch Units	25.00013
Calculated Distance (inches)	9.37505
Calculated Distance (mm)	**238.1263 mm**

			Units
W=	work done		Joules
T=	applied torque		Nm
Ø=	angle turned		radians
F=	force		Newton's
s	distance		m
g =		9.81	
PCD Pinion		63	mm
Input Variable			
Stair Angle		56	Deg
Gauge Distance of Track		3.5	m
Total Mass of stairlift		209.34	kg
Calc:			
Vertical Lift =		2.901631504	m
F =		2053.6254	N
W =		5958.864158	J
Circumference of pinion =		197.9203372	mm
Total angle turned through		111.1111111	rads
by pinion over gauge distance			
T = W/Ø Therefore T =		53.62977742	Nm
P=T ω Power in kw			
Design Velocity		0.12	m/s
rps		0.606304545	
rpm		36.37827271	
ω		3.80952381	
P=		0.204303914	kW

⬭ = Critical to quality.

Tolerance unless otherwise indicated: ISO 2768 mK	Remove all sharp edges. No finish on thread.	Tolerance principle conform ISO 8015	All dimensions are in mm unless otherwise indicated.

Material :
Finish :
Color :

Drawn by : ES
Date : 10-01-2024
Scale : 1:10

Released by : ES
Date : 16-01-2024
Checked by : PS

Sheet 10 / Total sheets 13

Projection:

Description: **4000/S23 - GENERAL ASSEMBLY**

Format: A2

handicare
www.handicare.com

This drawing is the property of Handicare and may not be reproduced, published or used for manufacturing without express written permission of Handicare.

Part number: **AA27130**

Revision: **10**

AA20687_10

Rev.	Description	By	Date
10	RELEASE	ES	16-01-2024

START OPTIONS:

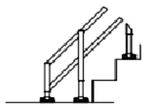

STARDARD START

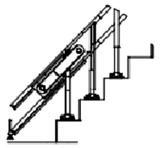

HINGE START

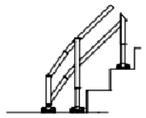

REDUCED LOWER INTRUSION

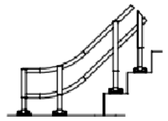

BOTTOM OVERRUN

END OPTIONS:

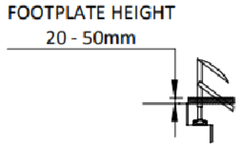

STANDARD FINISH

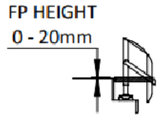

FLUSH FINISH

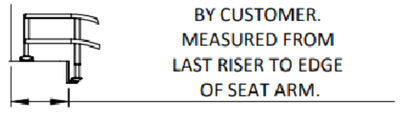

TOP OVERRUN

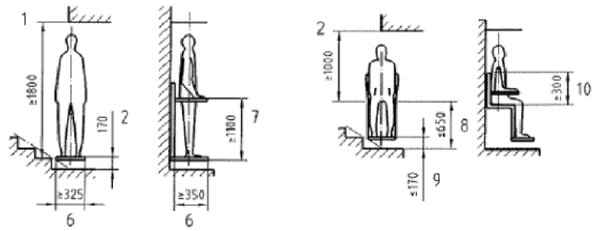

a) Standing passenger

b) Seated passenger

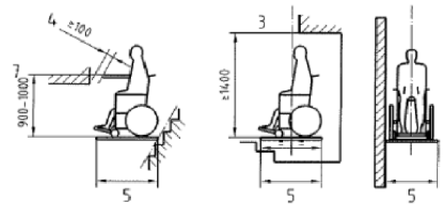

c) Passenger in wheelchair

Key

1	Standing passenger	5	Liftway height
2	Seated passenger	6	Width of stairlift pathway
3	Passenger in wheel chair	7	Platform
4	Minimum clearance dimension required at high angles of inclinaison	8	Foot-rest
--.--.--	Limitation of clear stairlift pathway		

NOTE The headroom dimensions shown should be achieved across the complete width of the stairlift pathway.

Figure 5 — Dimensions

DESIGN NOTES (NORTH AMERICA AND CANADA):

1. FOOTREST CLEARANCE. AT NO POINT IN ITS TRAVEL SHALL THE EDGE OF THE FOOTREST FACING THE UPPER LANDING BE MORE THAN 600 MM (24 IN.) ABOVE THE STEP OR LANDING AS MEASURED VERTICALLY.

2. LIMITATION OF ANGLE. NO LIFT SHALL BE INSTALLED TO OPERATE ON A GREATER INCLINE THAN 45 DEG AS MEASURED ON THE MEAN.

DESIGN NOTES (EUROPE):

1. MINIMUM CLEARANCE DIMENSIONS. REQUIRED MINIMUM CLEARANCE DIMENSIONS ARE SHOWN IN FIGURE 5. THE DIMENSIONS 1 800, 1 400 AND 1 000 ARE BASED UPON ANTHROPOMETRIC DATA. HOWEVER, IN THE CASE WHERE THE AVAILABLE SPACE IS TOO SMALL FOR THE REQUIRED MINIMUM CLEARANCE DIMENSIONS, DEVIATIONS ARE ALLOWED AFTER NEGOTIATIONS HAVE BEEN MADE FOR EACH CONTRACT BETWEEN THE CUSTOMER AND THE MANUFACTURER/INSTALLER AND INDIVIDUAL DOCUMENTED RISK ASSESSMENTS ARE COMPLETED.

2. WHEN THE CHAIR IS STATIONARY AT ITS NORMAL POSITION AT ANY BOARDING POINT, THE HEIGHT OF THE SURFACE OF THE FOOTREST ABOVE THE NORMAL FLOOR LEVEL SERVED SHALL BE AS LOW AS POSSIBLE AND NOT EXCEED 170mm.

3. DURING TRAVEL THE STAIRLIFT SHOULD FOLLOW THE LINE OF THE STAIRCASE AND LANDINGS. THIS WILL BE ACHIEVED BY MAINTAINING A CLEARANCE OF NO GREATER THAN 400mm BETWEEN THE NEAREST POINT OF THE FOOTREST AND THE LINE OF THE STAIRCASE NOSING. THIS IS A DESIGN AIM, BUT NOT A MANDATORY LIMIT.

4. IT IS RECOMMENDED THAT WHEN THE CHAIR IS STATIONARY AT ITS NORMAL POSITION AT ANY BOARDING POINT, THE HEIGHT OF THE SURFACE OF THE SEAT ABOVE THE NORMAL FLOOR LEVEL SERVED SHOULD NOT EXCEED 650mm.

= Critical to quality.

Tolerance unless otherwise indicated: ISO 2768 mK	Remove all sharp edges. No finish on thread.	Tolerance principle conform ISO 8015	All dimensions are in mm unless otherwise indicated.

Material :
Finish :
Color :

Drawn by : ES
Date : 10-01-2024
Scale : 1:10

Released by : ES
Date : 16-01-2024
Checked by : PS

Sheet 11 / Total sheets 13

Projection:

Description: **4000/S23 - GENERAL ASSEMBLY**

Format: A2

handicare
www.handicare.com

This drawing is the property of Handicare and may not be reproduced, published or used for manufacturing without express written permission of Handicare.

Part number: **AA27130**

Revision: **10**

AA20687_10

Rev.	Description	By	Date
10	RELEASE	ES	16-01-2024

THE FLOOR AND SUBSTRATE MUST BE CAPABLE OF WITHSTANDING A TURNING MOMENT OF 1120 Nm AND A DOWNWARD FORCE OF 330 kgf BASED ON OUR 160 kg SWL. GROUND WORKS TO MEET THESE CRITERIA MAY RESULT IN ADDITIONAL COST TO THE CLIENT.

FOR CONCRETE / STONE SURFACES WHERE THERE IS A LEAST 100 mm OF AVAILABLE DEPTH, ANCHOR BOLTS CAN BE USED TO PROVIDE ADDITION SUPPORT FOR THE TRACK.

WHERE THE FLOOR CONDITION IS NOT SECURE, CRACKED MARBLE OR CONCRETE, LOSE BRICK WORK OR A GRASSED AREA, A CONCRETE PAD SHOULD BE LAID PRIOR TO SURVEY, OR A RE-SURVEY WILL HAVE TO BE TAKEN AFTER THE MODIFICATIONS HAVE BEEN COMPLETED. THE PAD SHOULD BE AT LEAST 650 mm X 650 mm AND 100 mm DEEP.

PHOTO SURVEYS ARE STRONGLY ADVISED FOR ALL ORDERS. IF NOT POSSIBLE, PHOTOGRAPHS OF THE STAIRCASE AND SURROUNDING AREA MUST BE PROVIDED BY THE DEALER ALONG WITH AN ACCURATE SURVEY.

BRICKED AREAS SHOULD BE CEMENTED IN PLACE AND NOT JUST FIXED BY USING SAND AND COMPRESSION. (AS IS COMMON PLACE WITH THIS FLOOR TYPE)

CONCRETE AND MARBLE STEPS NEED TO BE IN GOOD CONDITION WITH NO CRACKS OR CRUMBLING EDGES. THE AREA SHOULD BE CLEAR OF ALL OBSTRUCTIONS.

VEGETATION AND MOSS SHOULD BE CLEARED AND BUILDING WORK SHOULD BE CARRIED OUT BEFOREHAND.

UNACCEPTABLE FLOOR CONDITIONS:







◯ = Critical to quality.

Tolerance unless otherwise indicated: ISO 2768 mK	Remove all sharp edges. No finish on thread.	Tolerance principle conform ISO 8015	All dimensions are in mm unless otherwise indicated.

Material :
Finish :
Color :

Drawn by : ES
Date : 10-01-2024
Scale : 1:10

Released by : ES
Date : 16-01-2024
Checked by : PS

Sheet 12 / Total sheets 13

Projection:

Description: **4000/S23 - GENERAL ASSEMBLY**

Format: A2

handicare
www.handicare.com

This drawing is the property of Handicare and may not be reproduced, published or used for manufacturing without express written permission of Handicare.

Part number: **AA27130**

Revision: **10**

AA20687_11

Rev.	Description	By	Date
10	RELEASE	ES	16-01-2024

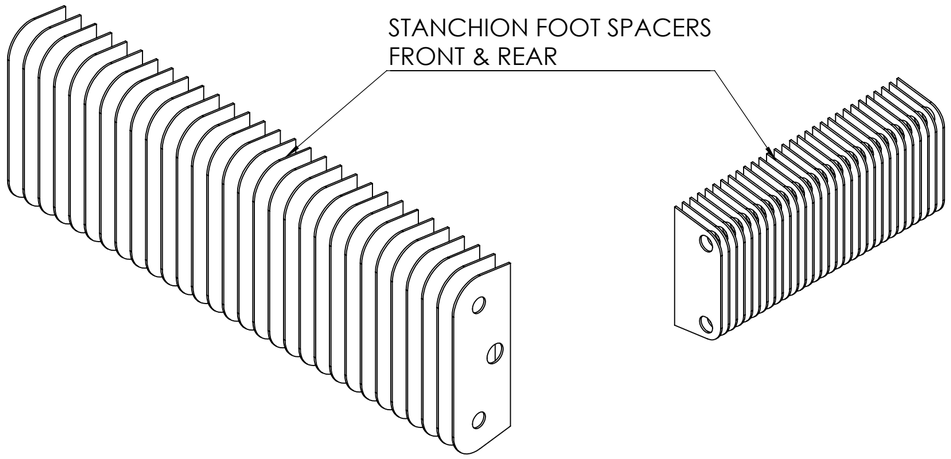

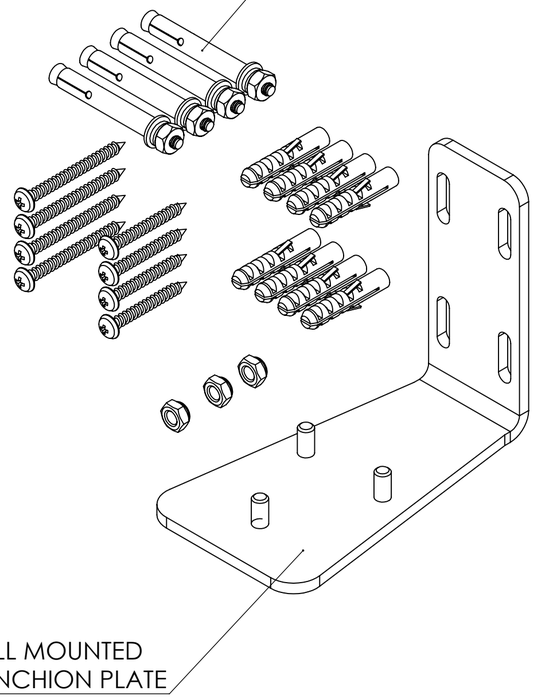

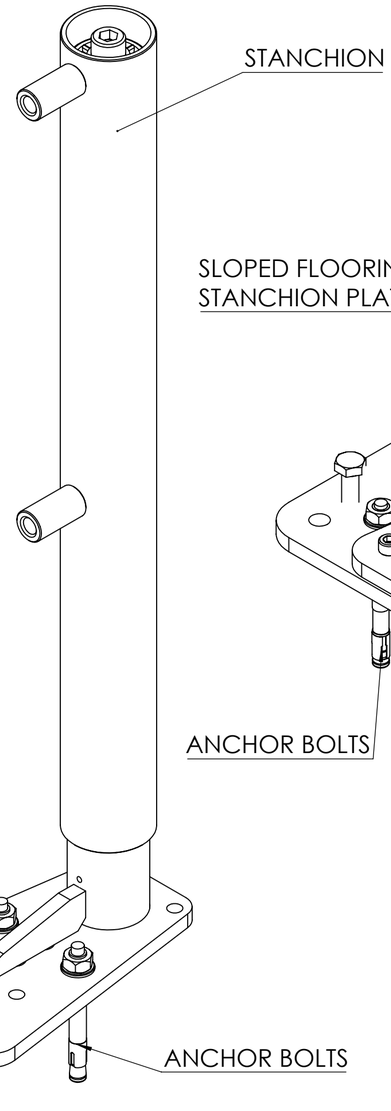

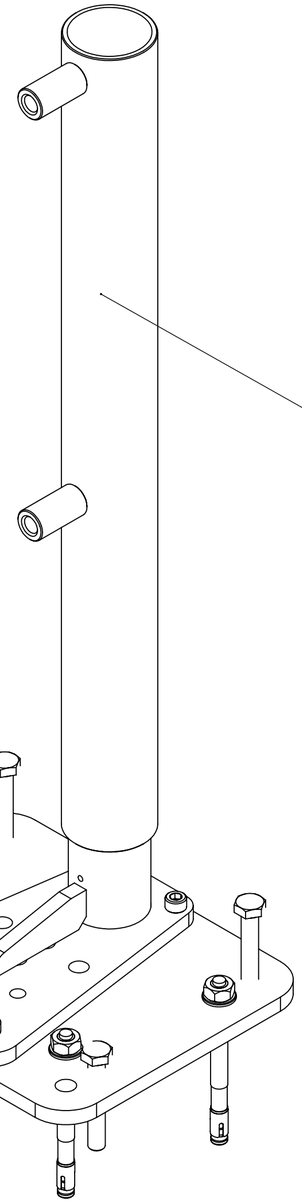

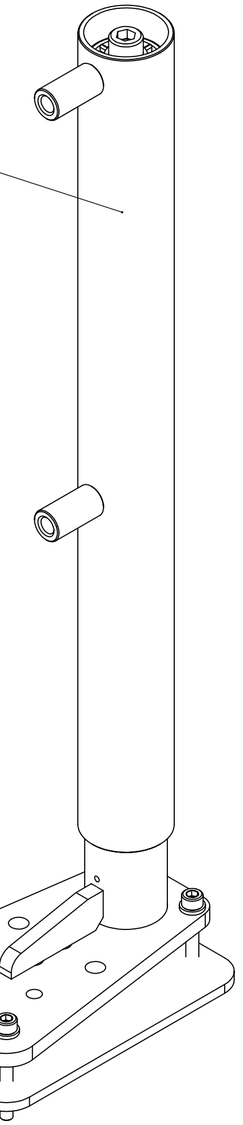

= Critical to quality.

Tolerance unless otherwise indicated: ISO 2768 mK	Remove all sharp edges. No finish on thread.	Tolerance principle conform ISO 8015	All dimensions are in mm unless otherwise indicated.

Material :
Finish :
Color :

Drawn by : ES
Date : 10-01-2024
Scale : 1:5

Released by : ES
Date : 16-01-2024
Checked by : PS

Sheet 13 / Total sheets 13

Projection:

Description: **4000/S23 - GENERAL ASSEMBLY**

Format: A2

handicare
www.handicare.com

This drawing is the property of Handicare and may not be reproduced, published or used for manufacturing without express written permission of Handicare.

Part number: **AA27130**

Revision: **10**

AA20687_11