SPECIFICATION:

MAXIMUM USER LOAD: 160kg(350lb)

NUMBER OF PERSONS: 1 PRESON

RATED SPEED: 0.1m/s (20 ft/min)

MAXIMUM INCLINATION: 56°

MINIMUM INCLINATION: 25°

RAIL LENGTH: MAXIMUM LENGTH 7.2m

POSITION ON STAIRS : LEFT OR RIGHT HAND (APPLICATION DEPENDANT)

SEAT TYPES:

SEAT COLOURS:

CONTROL POSITIONS: LEFT OR RIGHT HAND

FOOTPLATE OPTIONS: MANUAL OR POWERED

SWIVEL OPTIONS:MANUAL OR POWERED

SEAT BELT TYPES:

SEAT ARMS: STANDARD

BODY HARNESS:

SEAT BASE: STANDARD

ARM SPACERS : STANDARD

WELDING:

POWER SUPPLY:

SAFETY DEVICES:

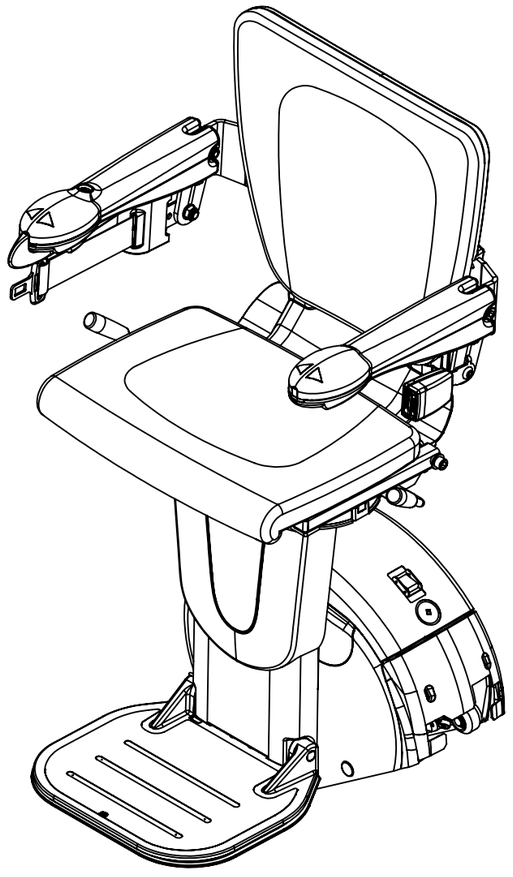

UNLESS OTHERWISE SPECIFIED:		NAME	DD/MM/YYYY
ALL DIMENSIONS ARE IN INCHES. ALL DIMENSIONS IN [ ] ARE METRIC. TOLERANCES: .X= ± .1 [X= ± 3] .XX= ± .03 [X.X= ± 0.8] .XXX= ± .010 [X.XX= ± 0.25] ANGLES .X°= ± .5°	DESIGNED BY	JOE	2026-03-12 05:44:24
PROPRIETARY AND CONFIDENTIAL THE INFORMATION CONTAINED IN THIS DRAWING IS THE SOLE PROPERTY OF SAVARIA. ANY REPRODUCTION IN PART OR AS A WHOLE WITHOUT THE WRITTEN PERMISSION OF SAVARIA IS PROHIBITED.	MATERIAL: N/A FINISH: N/A **NOTES (UNLESS OTHERWISE SPECIFIED):** -REMOVE ALL BURRS, WELDING SPATTER, SHARP CORNERS, OIL, LUBRICANTS AND OTHER CONTAMINANTS. - THE DIMENSIONS ON THE PRESENT DRAWING OVERRIDE ANY OTHER DATA (I.E., *.DXF, *.SLDPRT, ETC.).		
DO NOT SCALE DRAWING			

savaria

TITLE:

GENERAL ASSEMBLY

K2CE

DWG. NO.	REV
C6291000	0

SIZE: **A3** SCALE **1:24** SHEET 1 OF 9

REV.	ECO NO.	DESCRIPTION	REV. BY	APPR. BY	DD/MM/YYYY
0	0000	INITIAL RELEASE	-	F.LASTNAME	DD/MM/YYYY

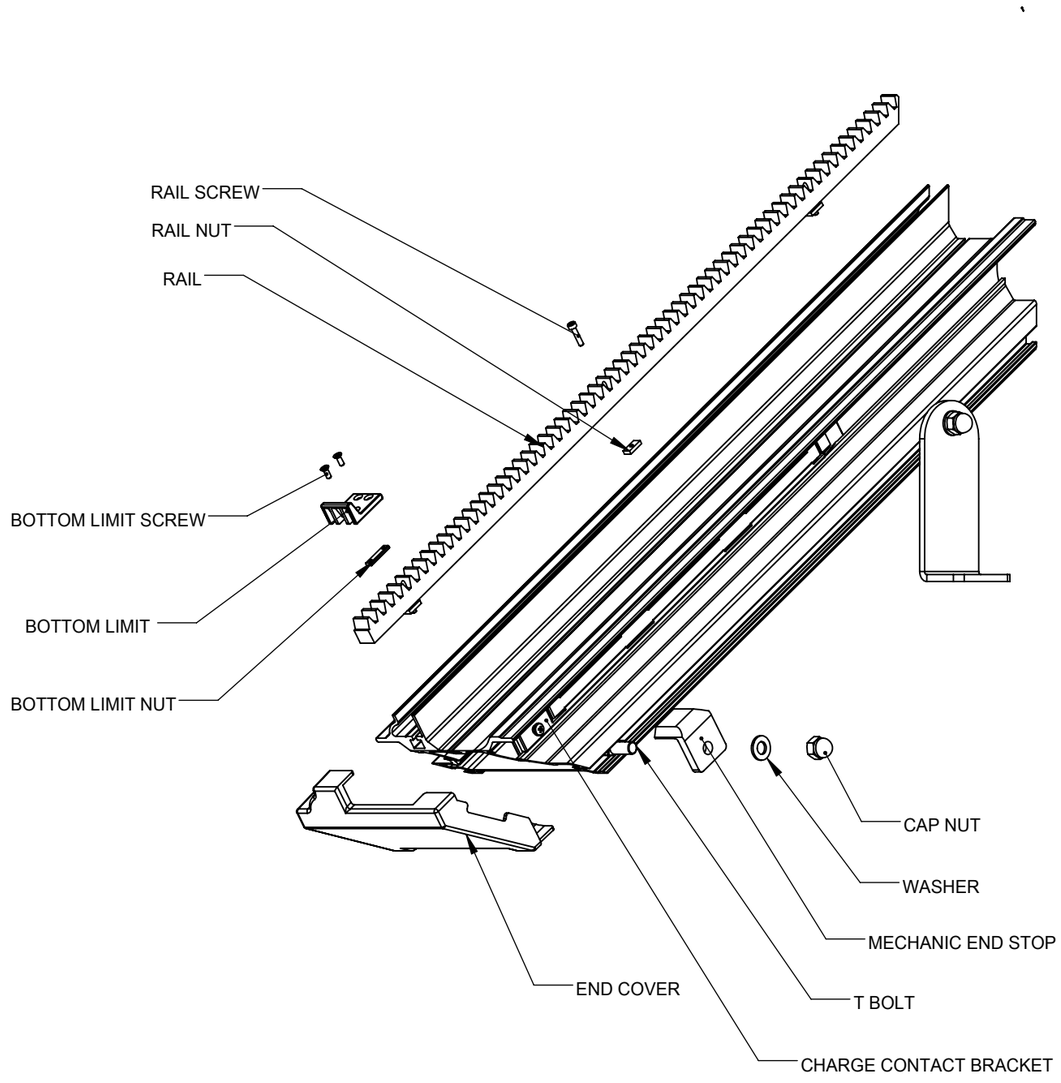

UNLESS OTHERWISE SPECIFIED:
ALL DIMENSIONS ARE IN INCHES.
ALL DIMENSIONS IN [ ] ARE METRIC.
TOLERANCES:
.X= ±.1 [X= ±3]
.XX= ±.03 [X.X= ±0.8]
.XXX= ±.010 [X.XX= ±0.25]
ANGLES .X° = ± .5°

PROPRIETARY AND CONFIDENTIAL
THE INFORMATION CONTAINED IN THIS DRAWING IS THE SOLE PROPERTY OF SAVARIA. ANY REPRODUCTION IN PART OR AS A WHOLE WITHOUT THE WRITTEN PERMISSION OF SAVARIA IS PROHIBITED.

DO NOT SCALE DRAWING

	NAME	DD/MM/YYYY
DESIGNED BY	JOE	2026-03-12 05:44:24

MATERIAL
N/A

FINISH
N/A

NOTES (UNLESS OTHERWISE SPECIFIED):
-REMOVE ALL BURRS, WELDING SPATTER, SHARP CORNERS, OIL, LUBRICANTS AND OTHER CONTAMINANTS.
- THE DIMENSIONS ON THE PRESENT DRAWING OVERRIDE ANY OTHER DATA (I.E., *.DXF, *.SLDPRT, ETC.).

savaria

TITLE:
GENERAL ASSEMBLY
K2CE

DWG. NO. C6291000
REV 0

SIZE: **A3** SCALE **1:24** SHEET 2 OF 9

MINIMUM LANDING REQUIREMENTS

WHEN RECOMMENDING A STAIRLIFT SOLUTION FOR A USER IT SHOULD ALWAYS BE AN OBJECTIVE TO PROVIDE THE SAFEST, LONG TERM SPECIFICATION TO MEET THE USERS NEEDS. THIS SHOULD IDEALLY INCLUDE ENABLING THE USER TO TRAVEL THE FULL LENGTH OF THE STAIRCASE WITHOUT THE NEED TO CLIMB ANY STEPS. THERE ARE SOME SITUATIONS HOWEVER DUE TO THE DESIGN OF THE STAIRCASE AND HOUSE THAT IT IS NOT FEASIBLE TO DO THIS.

ONE SUCH SITUATION IS WHERE THERE IS A QUARTER LANDING AT THE BOTTOM OF THE STAIRCASE WHICH MAY BE ONE TO TWO STEPS ABOVE GROUND LEVEL. IN THESE SITUATIONS I.E. WHERE THERE IS A FULL QUARTER LANDING, THE RISK FOR THE USER TO GET ON OR OFF A STAIRLIFT ON THE QUARTER LANDING MAY BE DEEMED AS LESS HAZARDOUS THAN CLIMBING THE FULL FLIGHT OF STAIRS UNAIDED.

HANDICARE OFFER THE FOLLOWING GUIDELINES TO HOW A LIFT CAN START ON A QUARTER LANDING, HOWEVER WE CANNOT ADVISE ON HOW SAFE THIS WILL BE FOR THE USER AS INDIVIDUALS HAVE VARYING ABILITIES.

IT IS THE RESPONSIBILITY OF THE PERSON ASSESSING THE USER TO CHECK THEY ARE BOTH SAFE TO TAKE A COUPLE OF STEPS AND SIT ON THE STAIRLIFT AND THAT THEY ALSO UNDERSTAND THE IMPLICATIONS OF THIS.

IF A CUSTOMER WISHES TO START THEIR STAIRLIFT TRACK ON A QUARTER LANDING THE FOLLOWING CRITERIA MUST BE MET:

1. THE SEAT MUST HAVE A POWERED FOOTPLATE THAT IS OPERATED FROM A SWITCH UNDER THE ARM OF THE SEAT. THIS WILL LEAVE THE AREA IN FRONT OF THE STAIRLIFT FREE GIVING MORE ROOM TO MANOEUVRE.

2. THE USER MUST BE ABLE TO MOVE THEIR LEGS ONCE SEATED TO ALLOW THE FOOTPLATE TO FOLD AND UNFOLD WITHOUT IT HITTING THE BACK OF THEIR LEGS.

THERE SHOULD ALSO BE ENOUGH ROOM BETWEEN THE EDGE OF THE SEAT AND THE NOSE OF THE TREAD (DIM A) TO ALLOW THE USER TO TURN AROUND TO SIT ON THE SEAT, I.E. A MINIMUM OF 360mm. WE BELIEVE A MEASUREMENT LESS THAN THIS WOULD MAKE IT UNSAFE FOR THE USER TO TURN TO SIT DOWN.

WE RECOMMEND THAT THESE DIMENSIONS ARE HIGHLIGHTED TO THE CUSTOMER/USER AND ALSO DETAILED ON QUOTATIONS.

IT IS NOT ACCEPTABLE TO START A LIFT PART WAY UP A STAIRCASE WHERE THE USER HAS TO BALANCE ON A SINGLE STANDARD TREAD IN ORDER TO MOUNT THE STAIRLIFT.

REMOTE CONTROLS

CONTROLS SHALL BE 1200mm MAXIMUM AND 380mm MINIMUM ABOVE THE PLATFORM FLOOR OR FACILITY FLOOR OR GROUND LEVEL.

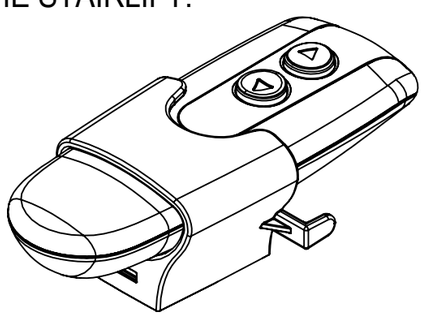

UNLESS OTHERWISE SPECIFIED:
ALL DIMENSIONS ARE IN INCHES.
ALL DIMENSIONS IN [ ] ARE METRIC.
TOLERANCES:
.X= ±.1 [X= ±3]
.XX= ± .03 [X.X= ±0.8]
.XXX= ± .010 [X.XX= ±0.25]
ANGLES .X°= ± .5°

PROPRIETARY AND CONFIDENTIAL
THE INFORMATION CONTAINED IN THIS DRAWING IS THE SOLE PROPERTY OF SAVARIA. ANY REPRODUCTION IN PART OR AS A WHOLE WITHOUT THE WRITTEN PERMISSION OF SAVARIA IS PROHIBITED.

DO NOT SCALE DRAWING

	NAME	DD/MM/YYYY
DESIGNED BY	JOE	2026-03-12 05:44:24

MATERIAL: N/A

FINISH: N/A

NOTES (UNLESS OTHERWISE SPECIFIED):
-REMOVE ALL BURRS, WELDING SPATTER, SHARP CORNERS, OIL, LUBRICANTS AND OTHER CONTAMINANTS.
- THE DIMENSIONS ON THE PRESENT DRAWING OVERRIDE ANY OTHER DATA (I.E., *.DXF, *.SLDPRT, ETC.).

savaria

TITLE:
GENERAL ASSEMBLY
K2CE

DWG. NO. C6291000 | REV 0

SIZE: **A3** | SCALE **1:24** | SHEET 3 OF 9

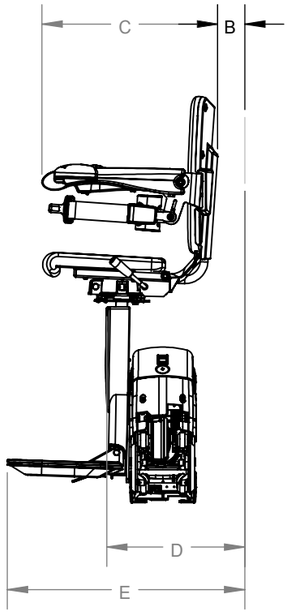

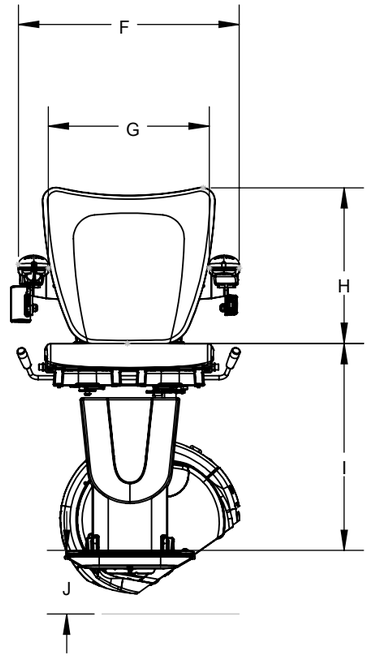

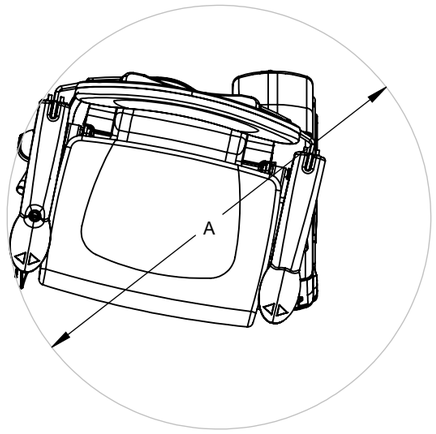

DIM.	DESCRIPTION	STYLE / SIMPLICITY	UNIT
A	MINIMUM SWIVEL RADIUS		
	WITH SHORT ARMREST		
B	WALL TO INNER SEAT BACK		
C	SEAT DEPTH		
D	MINIMUM FOLDED WIDTH TO FOOTPLATE		
E	MINIMUM OPEN WIDTH TO FOOTPLATE EDGE		
F	ARMREST WIDTH - EXTERNAL		
G	ARMREST WIDTH - INTERNAL		
H	SEAT BACK HEIGHT		
I	FOOTPLATE TO SEAT HEIGHT		
J	MINIMUM FOOTPLATE HEIGHT		
	MINIMUM TRACK INTRUSION INTO STAIRCASE		
	HEAVY DUTY WEIGHT LIMIT		
	STANDARD WEIGHT LIMIT		
	SPEED		
	MAXIMUM STAIRCASE ANGLE		

UNLESS OTHERWISE SPECIFIED:
ALL DIMENSIONS ARE IN INCHES.
ALL DIMENSIONS IN [ ] ARE METRIC.
TOLERANCES:
.X= ±.1 [X= ±3]
.XX= ±.03 [X.X= ±0.8]
.XXX= ±.010 [X.XX= ±0.25]
ANGLES .X° = ±.5°

PROPRIETARY AND CONFIDENTIAL
THE INFORMATION CONTAINED IN THIS DRAWING IS THE SOLE PROPERTY OF SAVARIA. ANY REPRODUCTION IN PART OR AS A WHOLE WITHOUT THE WRITTEN PERMISSION OF SAVARIA IS PROHIBITED.

DO NOT SCALE DRAWING

	NAME	DD/MM/YYYY
DESIGNED BY	JOE	2026-03-12 05:44:24

MATERIAL: N/A

FINISH: N/A

NOTES (UNLESS OTHERWISE SPECIFIED):
-REMOVE ALL BURRS, WELDING SPATTER, SHARP CORNERS, OIL, LUBRICANTS AND OTHER CONTAMINANTS.
- THE DIMENSIONS ON THE PRESENT DRAWING OVERRIDE ANY OTHER DATA (I.E., *.DXF, *.SLDPRT, ETC.).

savaria

TITLE:
GENERAL ASSEMBLY
K2CE

DWG. NO. C6291000 | REV 0

SIZE: **A3** | SCALE **1:24** | SHEET 4 OF 9

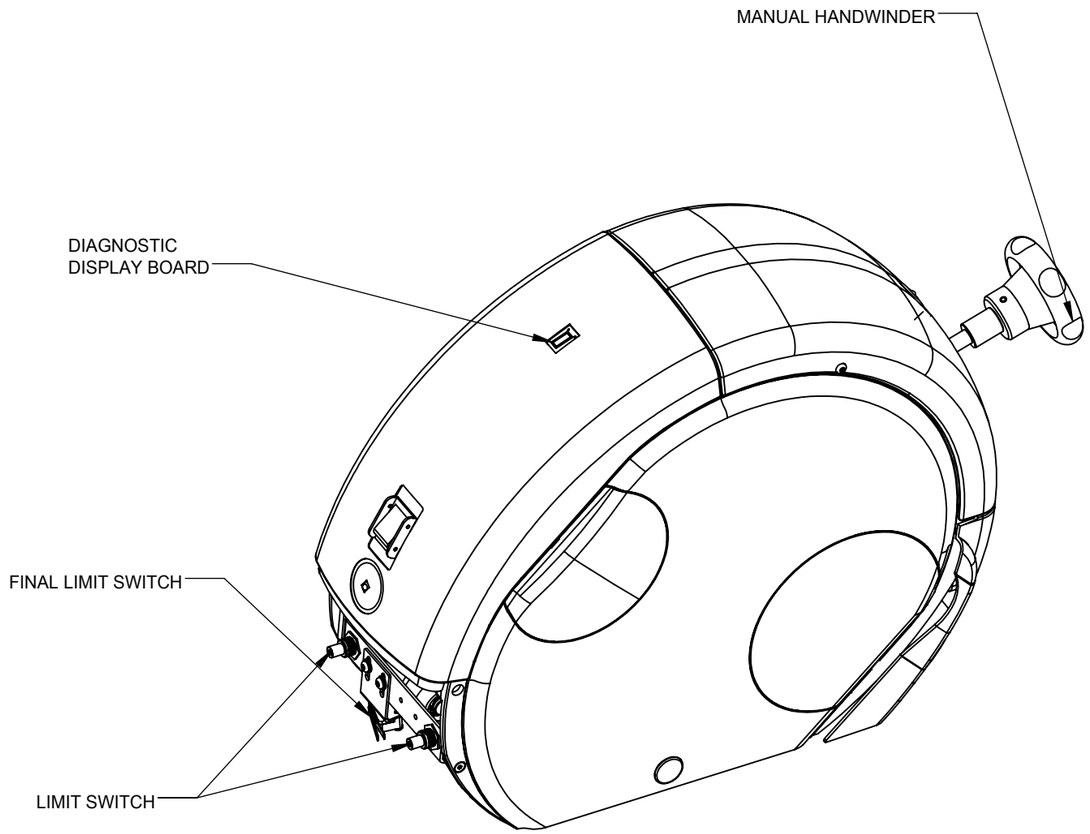

TERMINAL LIMIT AND FINAL TERMINAL LIMIT ACTIVIATION

1. THE FINAL LIMIT CONDITION IS ENTERED WHEN THE LEADING CARRIAGE (TRUNNION) SAFETY EDGE SWITCH AND THE TRAILING TERMINAL LIMIT SWITCH ARE BOTH OPERATED IN THE DIRECTION OF TRAVEL.

2. UNDER NORMAL OPERATION, AT THE END OF TRAVEL THE LEADING TERMINAL SWITCH WILL ENGAGE WITH THE LIMIT BRACKET. THIS ALERTS THE HAN125 CONTROL PCBA AND THE LIFT STOPS.

3. IF STEP 2 FAILS AND THE LIFT CONTINUES TO TRAVEL, (A) THE LEADING SAFETY EDGE WILL ENGAGE WITH THE MECHANICAL END STOP AND OPERATE THE SAFETY SWITCHES INSIDE THE TRUNNION AND (B) THE TRAILING TERMINAL LIMIT SWITCH WILL ENGAGE WITH THE CHARGE CONTACT BRACKET.

4. WITH BOTH THE LEADING SAFETY SWITCH AND TRAILING TERMINAL LIMIT SWITCH ACTIVATED, THE LIFT IS IN THE FINAL LIMIT CONDITION; THE LIFT WILL NOT RUN UP OR DOWN AND WILL NOT BE ABLE TO MOVE WITHOUT MANUAL HANDWINDING.

5. IF THE LIFT IS POWERED OFF AND ON IN THE FINAL LIMIT CONDITION THE LIFT WILL NOT MOVE WITHOUT MANUAL HANDWINDING.

6. IN THE FINAL LIMIT CONDITION CODES 4&5 OR 6&3 WILL SHOW ON THE DIAGNOSTIC DISPLAY BOARD DEPENDING ON HAND OF INSTALLATION AND POSITION ON THE RAIL SYSTEM.

7. IF THE UPPER OR LOWER TERMINAL LIMIT SWITCH SHORTS TO GROUND, THE SAFETY CIRCUIT IS ACTIVATED AND THE LIFT WILL NOT BE ABLE TO MOVE.

8. IF THE SAFETY EDGE SWITCHES SHORTS TO GROUND, THE SAFETY CIRCUIT IS ACTIVATED THE LIFT WILL NOT BE ABLE TO MOVE.

IN-SERVICE TEST PROCEDURE FOR TERMINAL LIMIT AND FINAL TERMINAL LIMIT ACTIVIATION

1. REMOVE THE UPPER OR LOWER TERMINAL LIMIT SWITCH FROM ITS BRACKET.

2. DRIVE THE LIFT TO THE END OF THE RAIL, (IF LOWER LIMIT SWITCH REMOVED DRIVE LIFT DOWN, IF UPPER LIMIT SWITCH REMOVED DRIVE LIFT UP)

3. THE SAFETY EDGE WILL ENGAGE WITH THE MECHANICAL END STOP, AND STEP 4 FROM THE ABOVE LIST WILL OCCUR.

4. CHECK IF CODES 4&5 OR 6&3 SHOW ON THE DIAGNOSTIC DISPLAY BOARD. IF SO, THE LIFT IS NOW SET INTO A FINAL STATE. IT WILL NOT RUN UP OR DOWN.

5. USING THE MANUAL HANDWINDER, MOVE THE LIFT OFF THE MECHANICAL END STOP.

6. RE-ATTACHED THE REMOVED TERMINAL LIMIT SWITCH. CHECK THAT THE LIFT IS FULLY FUNCTIONAL.

4 Code: 4	6 Code: 6
5 Code: 5	3 Code: 3

UNLESS OTHERWISE SPECIFIED:
ALL DIMENSIONS ARE IN INCHES.
ALL DIMENSIONS IN [ ] ARE METRIC.
TOLERANCES:
.X= ±.1 [X= ±3]
.XX= ±.03 [X.X= ±0.8]
.XXX= ±.010 [X.XX= ±0.25]
ANGLES .X ° = ±.5 °

PROPRIETARY AND CONFIDENTIAL
THE INFORMATION CONTAINED IN THIS DRAWING IS THE SOLE PROPERTY OF SAVARIA. ANY REPRODUCTION IN PART OR AS A WHOLE WITHOUT THE WRITTEN PERMISSION OF SAVARIA IS PROHIBITED.

DO NOT SCALE DRAWING

	NAME	DD/MM/YYYY
DESIGNED BY	JOE	2026-03-12 05:44:24

MATERIAL: N/A

FINISH: N/A

NOTES (UNLESS OTHERWISE SPECIFIED):
-REMOVE ALL BURRS, WELDING SPATTER, SHARP CORNERS, OIL, LUBRICANTS AND OTHER CONTAMINANTS.
- THE DIMENSIONS ON THE PRESENT DRAWING OVERRIDE ANY OTHER DATA (I.E., *.DXF, *.SLDPRT, ETC.).

savaria

TITLE:
GENERAL ASSEMBLY
K2CE

DWG. NO. C6291000 REV 0

SIZE: A3 SCALE 1:24 SHEET 5 OF 9

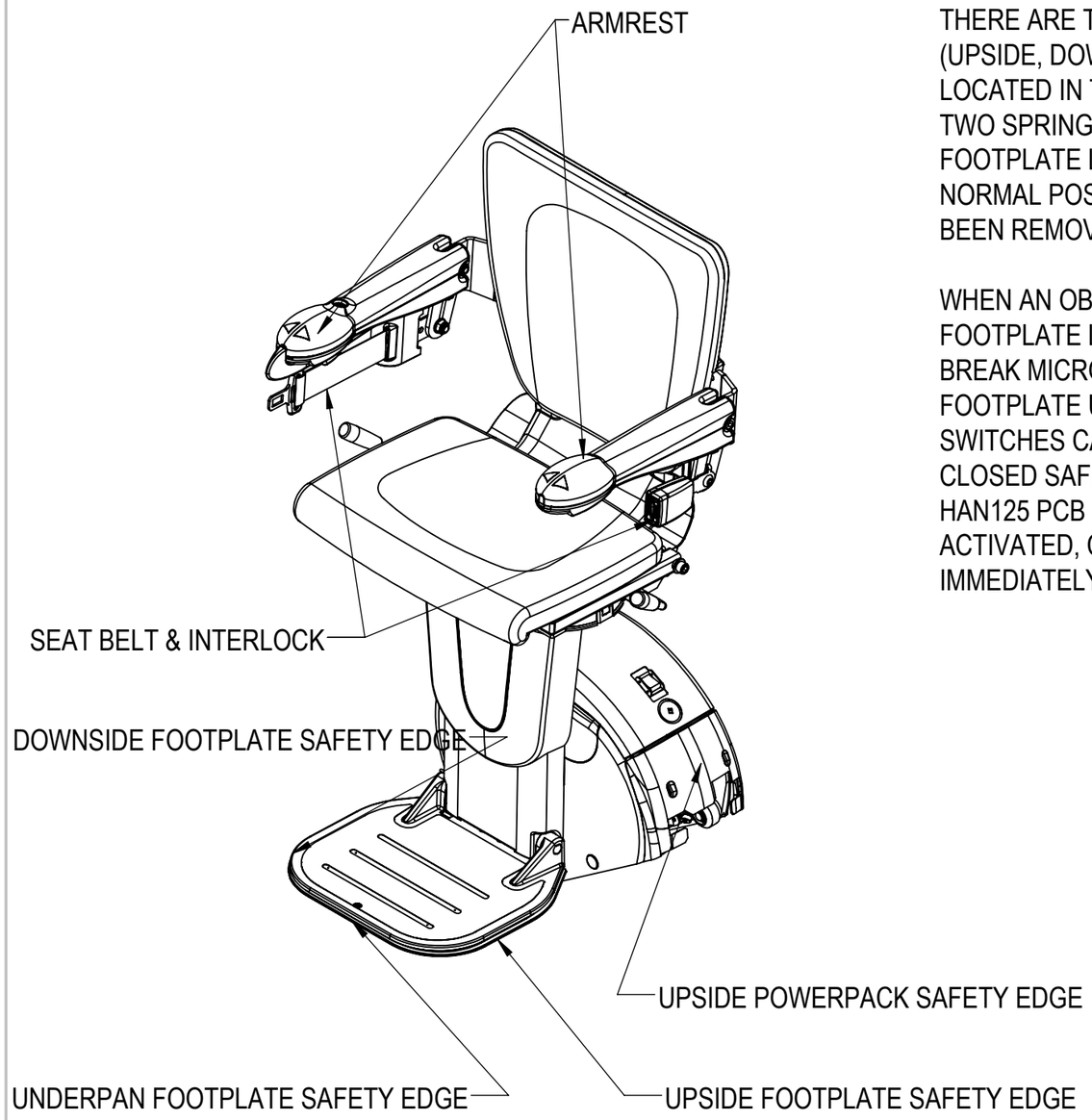

SENSITIVE EDGE DEFINITIONS:

THERE ARE THREE POSITIVE BREAK MICROSWITCHES (UPSIDE, DOWNSIDE, AND UNDERSURFACE) LOCATED IN THE FOOTPLATE LOWER MOULDING. TWO SPRINGS ARE USED TO RETURN THE FOOTPLATE LOWER MOULDING BACK TO ITS NORMAL POSITION WHEN THE OBSTRUCTION HAS BEEN REMOVED.

WHEN AN OBSTACLE COLLIDES WITH THE FOOTPLATE LOWER MOULDING, THE POSITIVE BREAK MICROSWITCH MAKES CONTACT WITH THE FOOTPLATE UPPER MOULDING, OPENING THE SWITCHES CAUSING A BREAK IN THE NORMALLY CLOSED SAFETY EDGE LOOPS. THIS ALERTS THE HAN125 PCB THAT THE SAFETY EDGE HAS BEEN ACTIVATED, CAUSING THE LIFT TO STOP IMMEDIATELY.

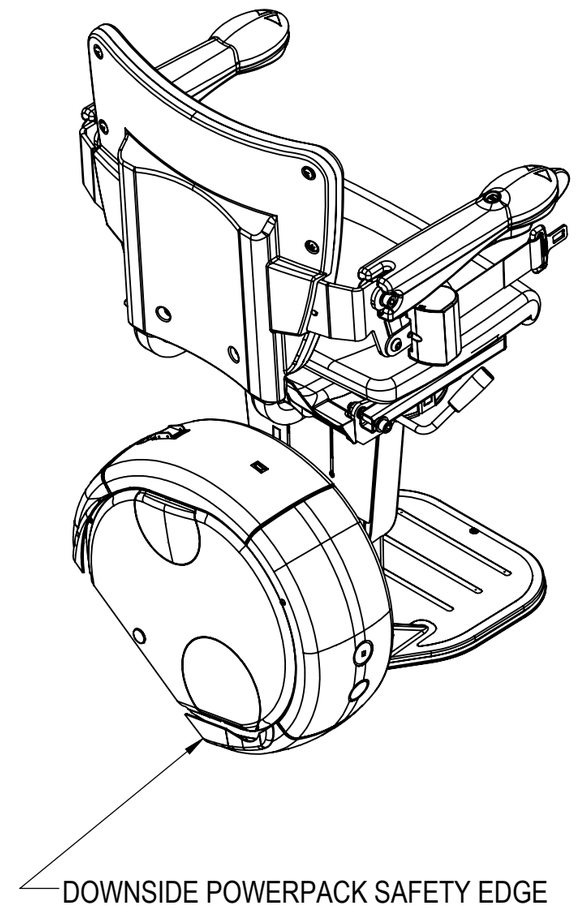

UNLESS OTHERWISE SPECIFIED:
ALL DIMENSIONS ARE IN INCHES.
ALL DIMENSIONS IN [ ] ARE METRIC.
TOLERANCES:
.X= ±.1 [X= ±3]
.XX= ±.03 [X.X= ±0.8]
.XXX= ±.010 [X.XX= ±0.25]
ANGLES .X°= ±.5°

PROPRIETARY AND CONFIDENTIAL
THE INFORMATION CONTAINED IN THIS DRAWING IS THE SOLE PROPERTY OF SAVARIA. ANY REPRODUCTION IN PART OR AS A WHOLE WITHOUT THE WRITTEN PERMISSION OF SAVARIA IS PROHIBITED.

DO NOT SCALE DRAWING

	NAME	DD/MM/YYYY
DESIGNED BY	JOE	2026-03-12 05:44:24

MATERIAL: N/A

FINISH: N/A

NOTES (UNLESS OTHERWISE SPECIFIED):
-REMOVE ALL BURRS, WELDING SPATTER, SHARP CORNERS, OIL, LUBRICANTS AND OTHER CONTAMINANTS.
- THE DIMENSIONS ON THE PRESENT DRAWING OVERRIDE ANY OTHER DATA (I.E., *.DXF, *.SLDPRT, ETC.).

savaria

TITLE:
GENERAL ASSEMBLY
K2CE

DWG. NO. C6291000 REV 0

SIZE: **A3** SCALE **1:24** SHEET 6 OF 9

OSG OPEN

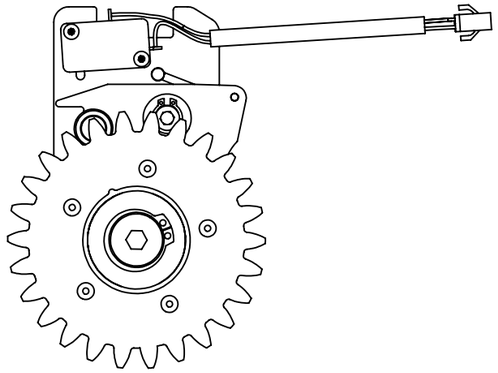

OSG ENGAGED

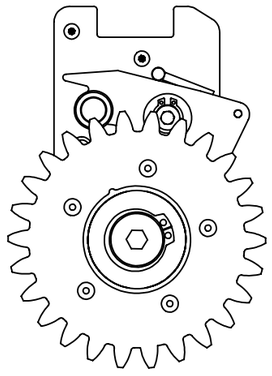

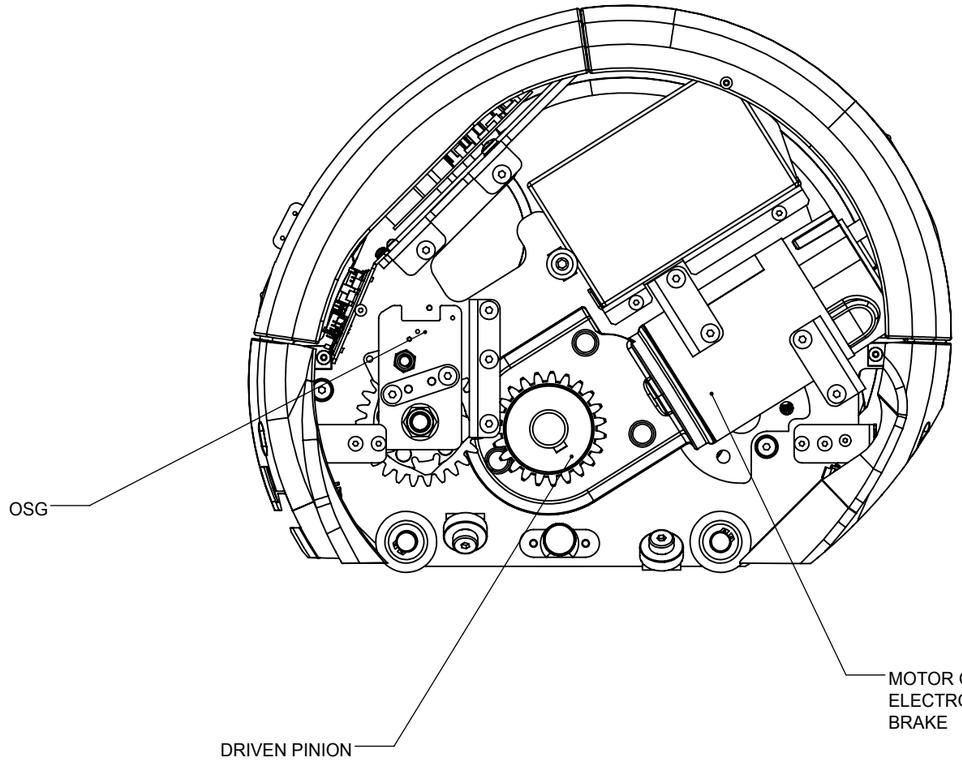

UNLESS OTHERWISE SPECIFIED:
ALL DIMENSIONS ARE IN INCHES.
ALL DIMENSIONS IN [ ] ARE METRIC.
TOLERANCES:
.X= ±.1 [X= ±3]
.XX= ±.03 [X.X= ±0.8]
.XXX= ±.010 [X.XX= ±0.25]
ANGLES .X° = ±.5°

PROPRIETARY AND CONFIDENTIAL
THE INFORMATION CONTAINED IN THIS DRAWING IS THE SOLE PROPERTY OF SAVARIA. ANY REPRODUCTION IN PART OR AS A WHOLE WITHOUT THE WRITTEN PERMISSION OF SAVARIA IS PROHIBITED.

DO NOT SCALE DRAWING

	NAME	DD/MM/YYYY
DESIGNED BY	JOE	2026-03-12 05:44:24

MATERIAL: N/A

FINISH: N/A

NOTES (UNLESS OTHERWISE SPECIFIED):
-REMOVE ALL BURRS, WELDING SPATTER, SHARP CORNERS, OIL, LUBRICANTS AND OTHER CONTAMINANTS.
- THE DIMENSIONS ON THE PRESENT DRAWING OVERRIDE ANY OTHER DATA (I.E., *.DXF, *.SLDPRT, ETC.).

savaria

TITLE:
GENERAL ASSEMBLY
K2CE

DWG. NO. C6291000 REV 0

SIZE: **A3** SCALE **1:24** SHEET 7 OF 9

BATT POSITIVE

DWG NO:AA33473

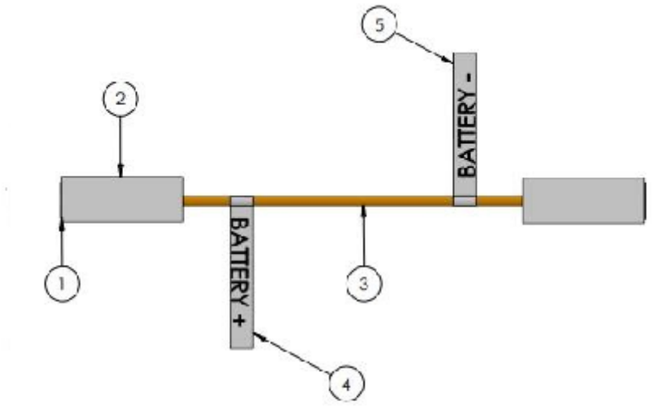

Item	Description	Part number	Material	Rev.	Qty.
5	Wire Lable: BATTERY -	AA33475			1
4	Wire Lable: BATTERY +	AA33477			1
3	ORANGE CABLE, 14AWG, UL 1569, Length 15cm	Cable_3-AA33479			1
2	6.3x0.8mm INSULATING BOOT, JST C5-63N004V0	AA29224	-	-	2
1	JST SYC-2.5T-250N NON-INSULATED 6.3mmX0.8 SPADE	AA33779	-	-	2

BATT NEGATIVE

DWG NO:AA33715

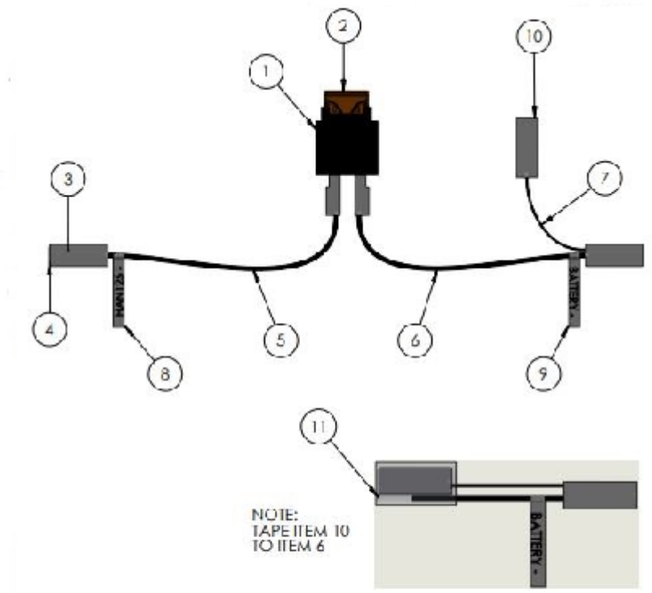

Item	Description	Part number	Material	Rev.	Qty.
11	TAPE, GENERAL PURPOSE, PVC, WIDTH: 19MM	AA34825			1
10	JST SYC-2.5T-250N NON-INSULATED 6.3mmX0.8 SPADE	AA16720	-	-	1
9	Wire Lable: BATTERY -	AA33475			1
8	Wire Lable: HAN12B	AA33539		A	1
7	BLACK CABLE, 20AWG, UL 1569, Length 10cm	Cable_3-AA33715-001		A	1
6	BLACK CABLE, 14AWG, UL 1569, Length 10cm	Cable_2-AA33715-001		A	1
5	BLACK CABLE, 14AWG, UL 1569, Length 10cm	Cable_1-AA33715-001		A	1
4	JST SYC-2.5T-250N NON-INSULATED 6.3mmX0.8 SPADE	AA33779	-	-	4
3	6.3x0.8mm INSULATING BOOT, JST C5-63N004V0	AA29224	-	-	3
2	LITTELFUSE ATA 25A OR SIMILAR	AA16726			1
1	RH010 OR SIMILAR ATC CABLE FUSE HOLDER	AA16926			1

BATT+-SWITCH

DWG NO:AA33474

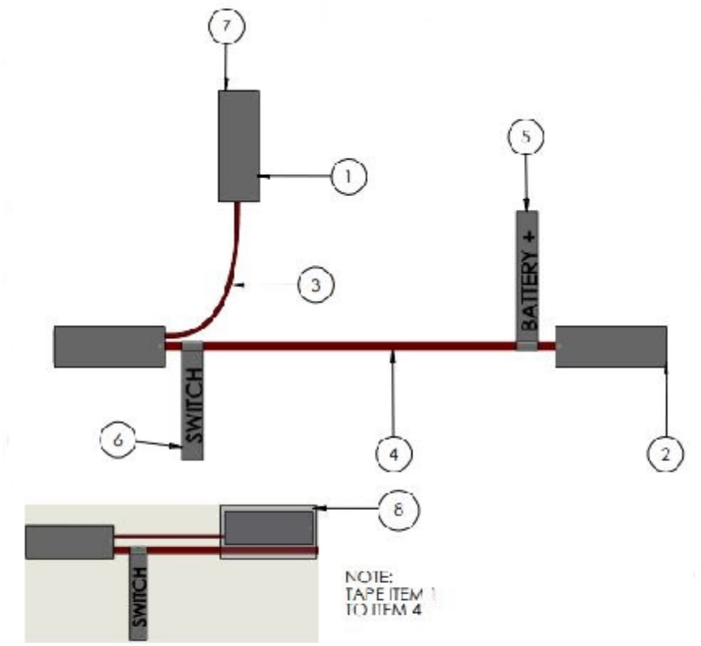

Item	Description	Part number	Material	Rev.	Qty.
8	TAPE, GENERAL PURPOSE, PVC, WIDTH: 19MM	AA34825			1
7	JST SYC-2.5T-250N NON-INSULATED 6.3mmX0.8 SPADE	AA16720	-	-	1
6	Wire Lable: SWITCH	AA33540			1
5	Wire Lable: BATTERY +	AA33477			1
4	RED CABLE, 14AWG, UL 1569, Length 40cm	Cable_2-AA33474		A	1
3	RED CABLE, 20AWG, UL 1569, Length 10cm	Cable_1-AA33474		A	1
2	RT SERIES PIN NON-INSULATED, 6.3mmX0.8 SPADE	AA33779	-	-	9
1	6.3x0.8mm INSULATING BOOT, JST C5-63N004V0	AA29224	-	-	3

UNLESS OTHERWISE SPECIFIED:
ALL DIMENSIONS ARE IN INCHES.
ALL DIMENSIONS IN [ ] ARE METRIC.
TOLERANCES:
.X= ± .1 [X= ± 3]
.XX= ± .03 [X.X= ± 0.8]
.XXX= ± .010 [X.XX= ± 0.25]
ANGLES .X° = ± .5°

PROPRIETARY AND CONFIDENTIAL
THE INFORMATION CONTAINED IN THIS DRAWING IS THE SOLE PROPERTY OF SAVARIA. ANY REPRODUCTION IN PART OR AS A WHOLE WITHOUT THE WRITTEN PERMISSION OF SAVARIA IS PROHIBITED.

DO NOT SCALE DRAWING

	NAME	DD/MM/YYYY
DESIGNED BY	JOE	2026-03-12 05:44:24

MATERIAL: N/A

FINISH: N/A

NOTES (UNLESS OTHERWISE SPECIFIED):
-REMOVE ALL BURRS, WELDING SPATTER, SHARP CORNERS, OIL, LUBRICANTS AND OTHER CONTAMINANTS.
- THE DIMENSIONS ON THE PRESENT DRAWING OVERRIDE ANY OTHER DATA (I.E., *.DXF, *.SLDPRT, ETC.).

savaria

TITLE:
GENERAL ASSEMBLY

K2CE

DWG. NO. C6291000

REV 0

SIZE: **A3** SCALE **1:24** SHEET 8 OF 9

REVISIONS				
ZONE	REV.	DESCRIPTION	DATE	APPROVED
-	-	See Sheet1	-	-

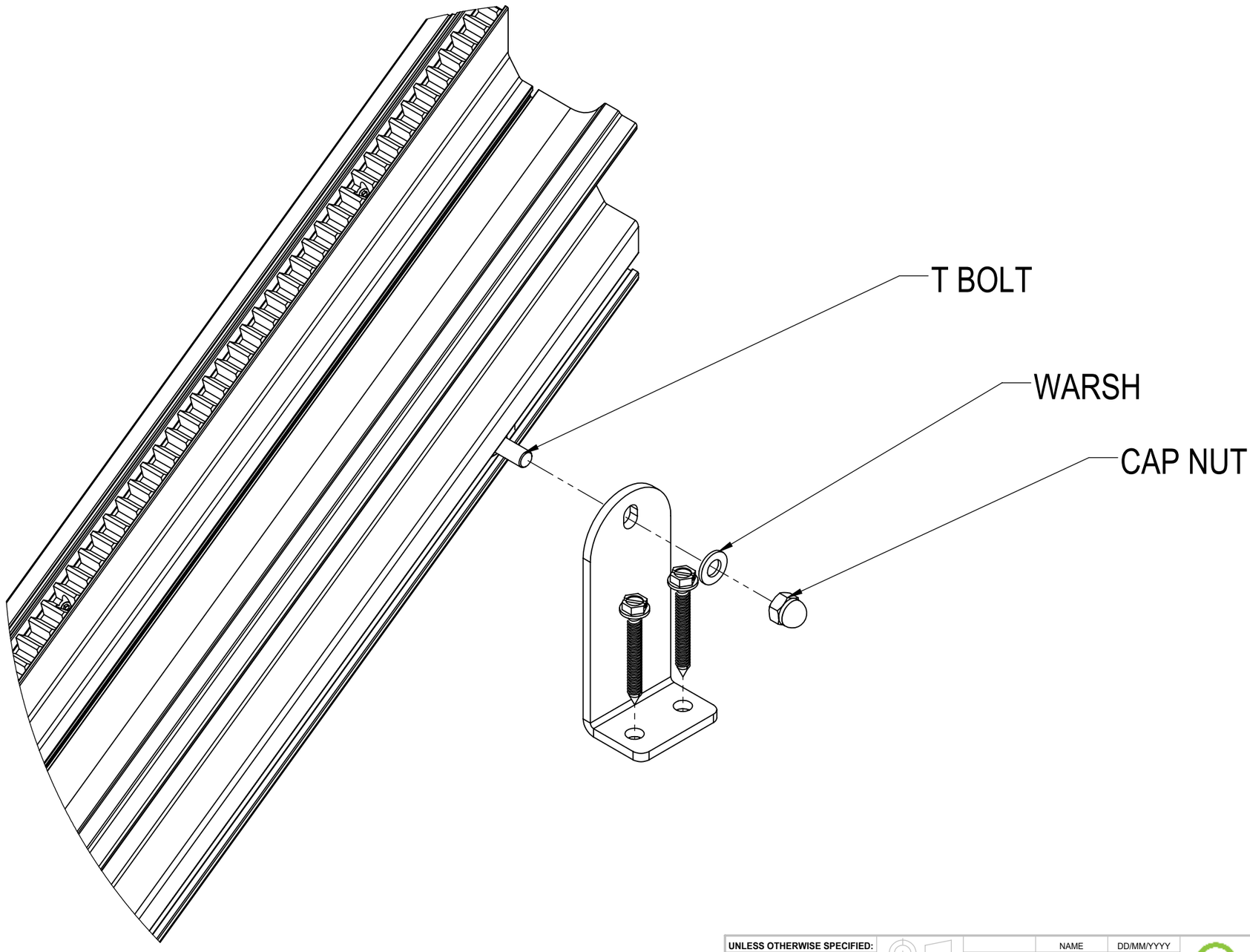

DETAIL H
SCALE 1 : 2

UNLESS OTHERWISE SPECIFIED:		NAME	DD/MM/YYYY
ALL DIMENSIONS ARE IN INCHES. ALL DIMENSIONS IN [ ] ARE METRIC. TOLERANCES: .X= ±.1 [X= ±3] .XX= ±.03 [X.X= ±0.8] .XXX= ±.010 [X.XX= ±0.25] ANGLES .X° = ±.5°	DESIGNED BY	JOE	2026-03-12 05:44:24
	MATERIAL	N/A	
	FINISH	N/A	
PROPRIETARY AND CONFIDENTIAL THE INFORMATION CONTAINED IN THIS DRAWING IS THE SOLE PROPERTY OF SAVARIA. ANY REPRODUCTION IN PART OR AS A WHOLE WITHOUT THE WRITTEN PERMISSION OF SAVARIA IS PROHIBITED.	**NOTES (UNLESS OTHERWISE SPECIFIED):** -REMOVE ALL BURRS, WELDING SPATTER, SHARP CORNERS, OIL, LUBRICANTS AND OTHER CONTAMINANTS. - THE DIMENSIONS ON THE PRESENT DRAWING OVERRIDE ANY OTHER DATA (I.E., *.DXF, *.SLDPRT, ETC.).		
DO NOT SCALE DRAWING			

savaria

TITLE:

GENERAL ASSEMBLY

K2CE

DWG. NO.	REV
C6291000	0

SIZE: **A3** SCALE **1:24** SHEET 9 OF 9